General information

PWS5620261125

The DAT 400 weight transmitter is an exclusive product of Pavone Sistemi that guarantees high performance and reliability. It has an upload and download function for programming with Tester 1008. Configuration and calibration can be set up from the front panel or from a PC via the USB port. The bipolar option is available on request. The DAT 400 weight transmitter can be customized according to customer needs. It has a peak hold function for dynamic measures and screw terminal blocks.



Software Inovation 2: inovation_2_weighing_software.zip

Technical Manual: dat-400_en.pdf

Technical Manual: dat-400_analog_en.pdf

All indicated data may be changed without notice.
All the measures indicated are expressed in millimeters (mm).

Technical specifications

PWS5620261125

Measuring range:	-0.5 ÷ +3.5 mV/V (-3.9 ÷ +3.9 mV/V optional)
Input sensitivity:	0.02 µV/count
Full scale non-Linearity:	< 0.01%
Gain drift:	< 0.001% FS/°C
Display:	6 digit, red LED (7 segments), h 14 mm
A/D Converter:	24 bit
Internal Resolution:	> 16.000.000 points
Trasducer input voltage:	5 V (max 6 load cells 350 Ohm)
Visible resolution (in divisions):	60000
Divisions value (adjustable):	x1, x2, x5
Decimal figures range:	0 ÷ 3
Temperature range:	-10 ÷ +50°C (max umidity 85% without condensation)
Storage temperature:	-20 ÷ +70 °C
Filter:	0.1 ÷ 25 Hz
Logic output:	2 Solid-state relays, (maximum load 24 Vdc / 100 mA each)
Logic inputs:	2 optoisolated 24 Vdc PNP (External voltage)
Serial port:	Nr. 2 - USB/RS232C, RS422/485 with ASCII or Modbus RTU protocols
Power supply:	24 Vcc ±15% - power 5 W
Regulatory compliance:	EN61326-1, EN55011, EN55014 for EMC; EN61010-1 for electrical security
Dimensions and weight:	106 x 90 x 58 mm (L x H x P); 250 g
Baud rate:	2400, 9600, 19200, 38400, 115200 adjustable (RS232)
Transmission distance:	15m (RS232C), 1000m (RS422; RS485)

All indicated data may be changed without notice.
All the measures indicated are expressed in millimeters (mm).

Weight Transmitter **DAT 400**

available with certification • UL • GOST • OIML

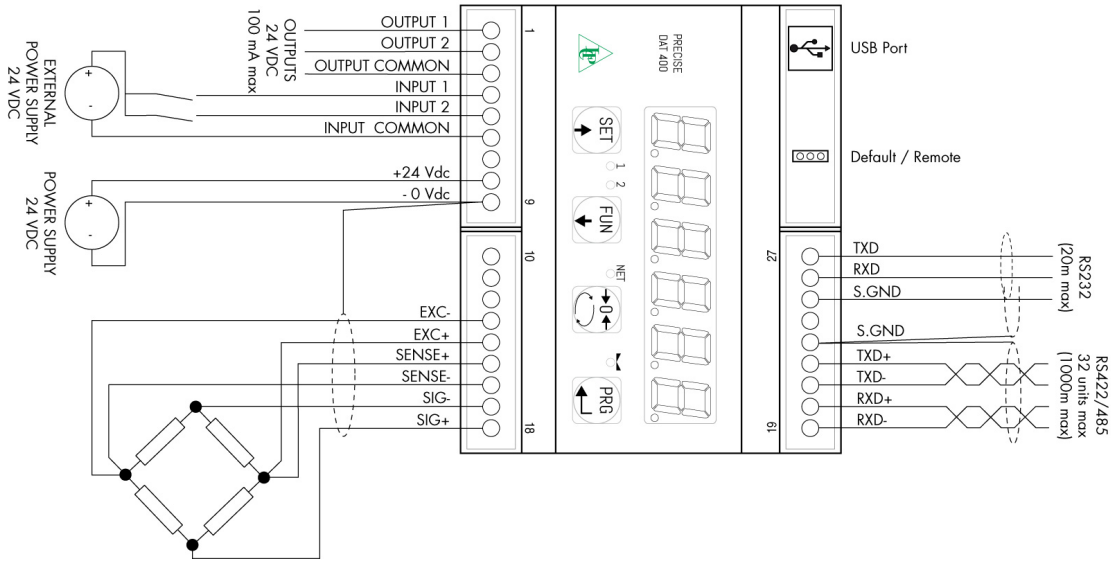

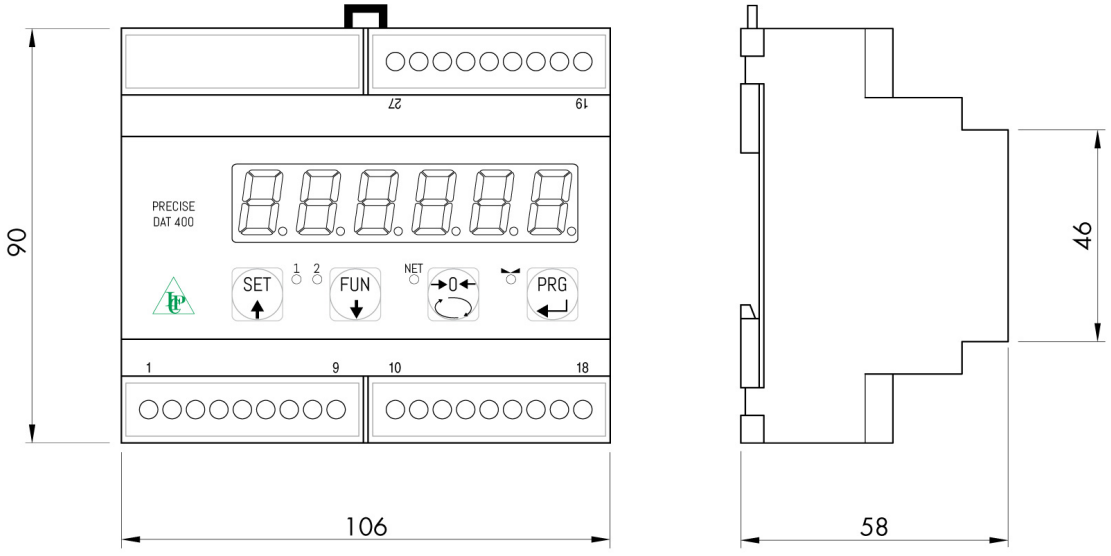

All indicated data may be changed without notice.
All the measures indicated are expressed in millimeters (mm).

PAVONE SISTEMI S.R.L.
Via Tiberio Bianchi 11/13/15, 20863 Concorezzo (MB), Milan, Italy
T (+39) 039 9162656 **F** (+39) 039 9162675 **W** pavonesistemi.com
Industrial Electronic Weighing Systems since 1963