Weight Transmitter **DAT 500 Profibus**

General information

PWS22620261125

The weight transmitter DAT 500 Profibus guarantees high performance and reliability. It has the upload and download function for the programming with TESTER 1008. The weight transmitter DAT 500 Profibus can be connected through the external converter and the configuration and calibration can be set up from the front panel or from the PC with the Inovation ™ program (MS WINDOWS). The weight transmitter DAT 500 Profibus has a Peak Hold function for dynamic weighings and screw terminal blocks.



Software Inovation 2: inovation_2_weighing_software.zip

Profibus GSD file: dat_400_500_profibus_gsd.zip

Technical Manual: dat-500_en.pdf

Technical Manual: dat-500_fieldbus_en.pdf

Profibus GSD file (HMS): profibus_hms_gsd.zip

All indicated data may be changed without notice.
All the measures indicated are expressed in millimeters (mm).

PAVONE SISTEMI S.R.L.
Via Tiberio Bianchi 11/13/15, 20863 Concorezzo (MB), Milan, Italy
T (+39) 039 9162656 **F** (+39) 039 9162675 **W** pavonesistemi.com
Industrial Electronic Weighing Systems since 1963

Technical specifications

PWS22620261125

Measuring range:	-0.5 ÷ +3.5 mV/V (-3.9÷+3.9 mV/V optional)
Input sensitivity:	0.02 µV/count
Full scale non-Linearity:	<0.01%
Gain drift:	<0.001% FS/°C
Display:	6 digit, red LED (7 segments), h 14 mm
A/D Converter:	24 bit
Internal Resolution:	> 16.000.000 points
Trasducer input voltage:	5 V (max 6 load cells 350 Ohm)
Visible resolution (in divisions):	60000
Divisions value (adjustable):	x1, x2, x5
Decimal figures range:	0 ÷ 3
Temperature range:	-10 ÷ +50°C (max umidity 85% without condensation)
Storage temperature:	-20 ÷ +70 °C
Filter:	0.1 ÷ 25 Hz
Logic output:	2 Solid-state relays, (maximum load 24 Vdc / 100 mA each)
Logic inputs:	2 optoisolated 24 Vcc PNP (External voltage)
Serial port:	RS232C with ASCII or Modbus RTU protocols
Power supply:	24 V c.c. ±15% - power 5 W
Regulatory compliance:	EN61326-1, EN55011, EN55014 for EMC; EN61010-1 for electrical security
Fieldbus:	Profibus
Dimensions and weight:	96 x 48 x 120 mm (L x H x D); 250 g
Baud rate:	2400, 9600, 19200, 38400, 115200 adjustable
Transmission distance:	15m (RS232C)

All indicated data may be changed without notice.
All the measures indicated are expressed in millimeters (mm).

Weight Transmitter **DAT 500 Profibus**

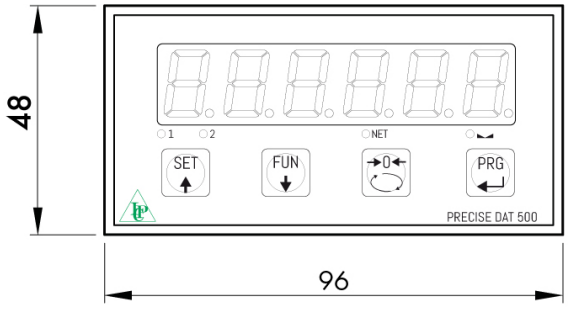

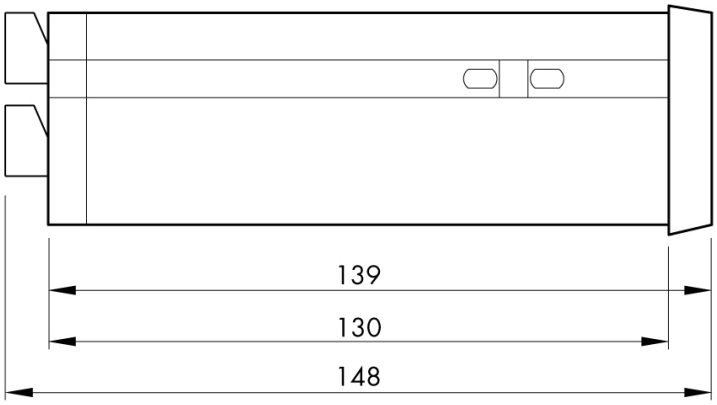

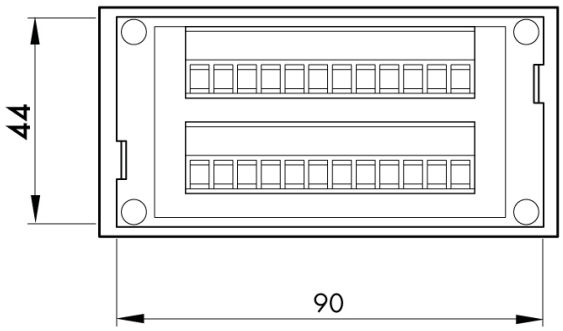

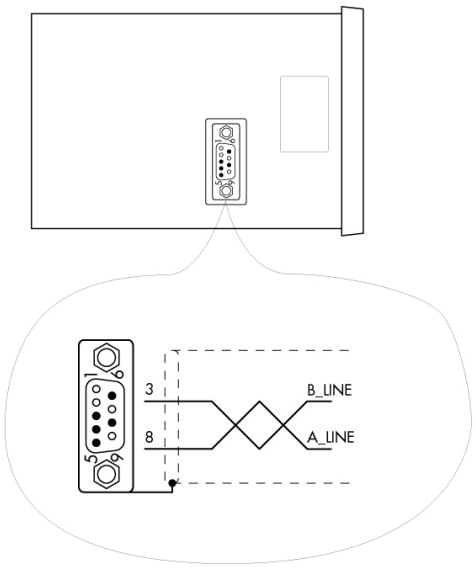

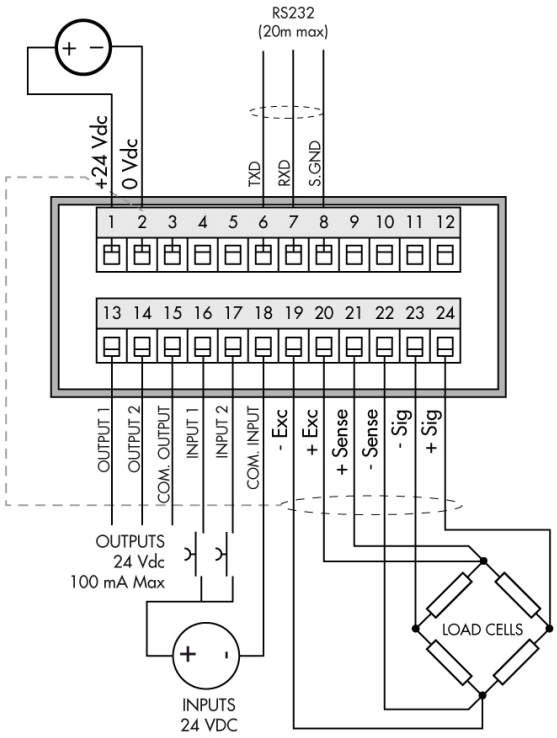

All indicated data may be changed without notice.
All the measures indicated are expressed in millimeters (mm).

PAVONE SISTEMI S.R.L.
Via Tiberio Bianchi 11/13/15, 20863 Concorezzo (MB), Milan, Italy
T (+39) 039 9162656 **F** (+39) 039 9162675 **W** pavonesistemi.com
Industrial Electronic Weighing Systems since 1963