# Weight Transmitter **DAT 500 Devicenet**

available with certification • UL • GOST

## General information

PWS22820261125

The DAT 500 Devicenet weight transmitter has high performance and reliability and It has the upload and download function for the programming with TESTER 1008. The DAT 500/DEVICENET can be connected through the external converter and the configuration and calibration can be set up from the front panel or from the PC with the Inovation ™ program (MS WINDOWS). The weight transmitter DAT 500 Devicenet has a Peak Hold function for dynamic weighings and screw terminal blocks.




Software Inovation 2: inovation_2_weighing_software.zip

Devicenet EDS file: dat_400_500_devicenet_eds.zip

Technical Manual: dat-500_en.pdf

Technical Manual: dat-500_fieldbus_en.pdf

All indicated data may be changed without notice.
All the measures indicated are expressed in millimeters (mm).

**PAVONE SISTEMI S.R.L.**
Via Tiberio Bianchi 11/13/15, 20863 Concorezzo (MB), Milan, Italy
**T** (+39) 039 9162656 **F** (+39) 039 9162675 **W** pavonesistemi.com
Industrial Electronic Weighing Systems since 1963

# Technical specifications

PWS22820261125

| | |
|---|---|
| **Measuring range:** | -0.5 ÷ +3.5 mV/V (-3.9÷+3.9 mV/V optional) |
| **Input sensitivity:** | 0.02 µV/count |
| **Full scale non-Linearity:** | <0.01% |
| **Gain drift:** | <0.001% FS/°C |
| **Display:** | 6 digit, red LED (7 segments), h 14 mm |
| **A/D Converter:** | 24 bit |
| **Internal Resolution:** | > 16.000.000 points |
| **Trasducer input voltage:** | 5 V (max 6 load cells 350 Ohm) |
| **Visible resolution (in divisions):** | 60000 |
| **Divisions value (adjustable):** | x1, x2, x5 |
| **Decimal figures range:** | 0 ÷ 3 |
| **Temperature range:** | -10 ÷ +50°C (max umidity 85% without condensation) |
| **Storage temperature:** | -20 ÷ +70 °C |
| **Filter:** | 0.1 ÷ 25 Hz |
| **Logic output:** | 2 Solid-state relays, (maximum load 24 Vdc / 100 mA each) |
| **Logic inputs:** | 2 optoisolated 24 Vcc PNP (External voltage) |
| **Serial port:** | RS232C with ASCII or Modbus RTU protocols |
| **Power supply:** | 24 Vcc ±15% - power 5 W |
| **Regulatory compliance:** | EN61326-1, EN55011, EN55014 for EMC; EN61010-1 for electrical security |
| **Baud rate:** | 2400, 9600, 19200, 38400, 115200 adjustable |
| **Transmission distance:** | 15m (RS232C) |
| **Fieldbus:** | Devicenet |
| **Dimensions and weight:** | 96 x 48 x 120 mm (L x H x D); 250 g |

All indicated data may be changed without notice.
All the measures indicated are expressed in millimeters (mm).

# Weight Transmitter **DAT 500 Devicenet**

available with certification • UL • GOST

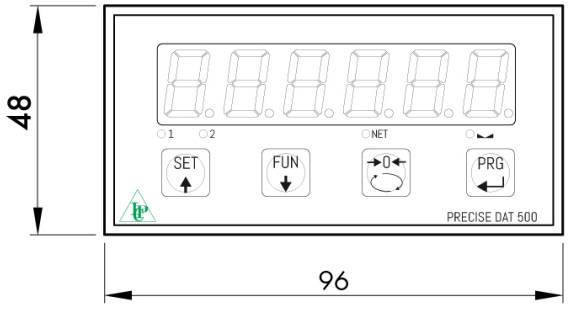


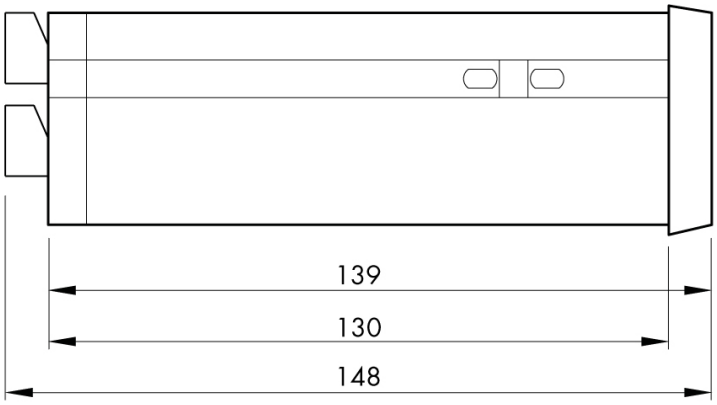


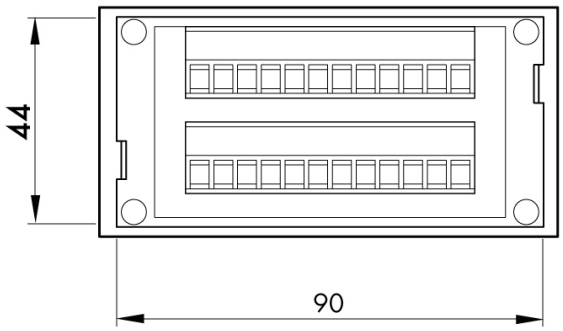


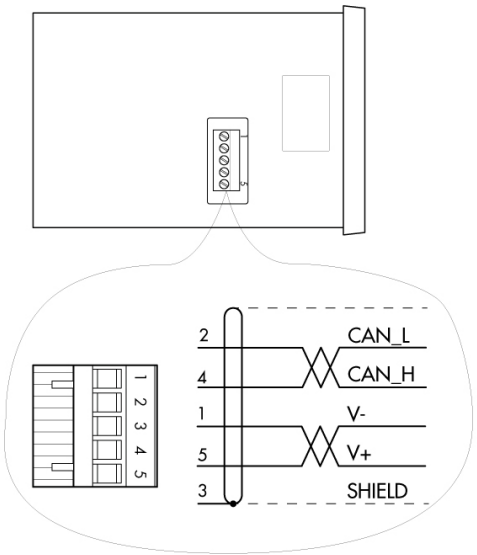


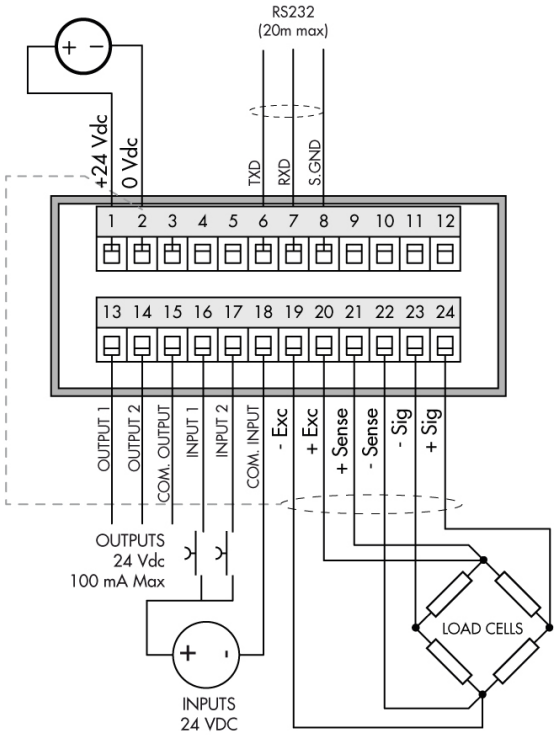


All indicated data may be changed without notice.
All the measures indicated are expressed in millimeters (mm).

**PAVONE SISTEMI S.R.L.**
Via Tiberio Bianchi 11/13/15, 20863 Concorezzo (MB), Milan, Italy
**T** (+39) 039 9162656 **F** (+39) 039 9162675 **W** pavonesistemi.com
Industrial Electronic Weighing Systems since 1963