Weight Transmitter **DAT 400 PBL**

available with certification • OIML

General information

PWS5920261125

The DAT 400 PBL weight transmitter is an innovative and exclusive product by Pavone Sistemi that can be customized. Among its features, there are the upload and download function for programming with TESTER 1008, 32 addressable units that are connectable to PC or PLC, linearization on 10 points and configuration and calibration from the front panel or PC via the USB serial port. It has a peak hold function for dynamic measures and screw terminal blocks.



Software Inovation 2: inovation_2_weighing_software.zip

Technical Manual: dat-400_en.pdf

Technical Manual: dat-400_analog_en.pdf

Technical Manual: dat-400_fieldbus_en.pdf

All indicated data may be changed without notice.
All the measures indicated are expressed in millimeters (mm).

PAVONE SISTEMI S.R.L.
Via Tiberio Bianchi 11/13/15, 20863 Concorezzo (MB), Milan, Italy
T (+39) 039 9162656 **F** (+39) 039 9162675 **W** pavonesistemi.com
Industrial Electronic Weighing Systems since 1963

Technical specifications

PWS5920261125

Measuring range:	-0.5÷+3..5 mV/V (-3.9÷+3.9 mV/V optional)
Input sensitivity:	0.02 µV/count
Full scale non-Linearity:	<0.01%
Gain drift:	<0.001% FS/°C
Display:	6 digit, red LED (7 segments), h 14 mm
A/D Converter:	24 bit
Internal Resolution:	> 16.000.000 points
Trasducer input voltage:	5 V (max 6 load cells 350 Ohm)
Visible resolution (in divisions):	60000
Decimal figures range:	0 ÷ 3
Temperature range:	-10 ÷ +50°C (max umidity 85% without condensation)
Storage temperature:	-20 ÷ +70°C
Filter:	0.1 ÷ 25 Hz
Logic output:	2 Solid-state relays, (maximum load 24 Vdc / 100 mA each)
Logic inputs:	2 optoisolated 24 V c.c. PNP (External voltage)
Serial port:	USB, RS232C or RS422/RS485 with ASCII or Modbus RTU protocols
Power supply:	230 Vac 50 Hz - power 5 W
Regulatory compliance:	EN50081-1, EN50082-2 for EMC; EN61010-1 for Electrical security
Fieldbus:	Profibus, Devicenet, Ethernet, Profinet, CANopen, Modbus-Plus, Precise Gateway 3000
Dimensions and weight:	298x260x140 (LxHxD)
Baud rate:	2400, 9600, 19200, 38400, 115200 adjustable
Transmission distance:	15m (RS232C), 1000m (RS422; RS485)

All indicated data may be changed without notice.
All the measures indicated are expressed in millimeters (mm).

Weight Transmitter **DAT 400 PBL**

available with certification • OIML

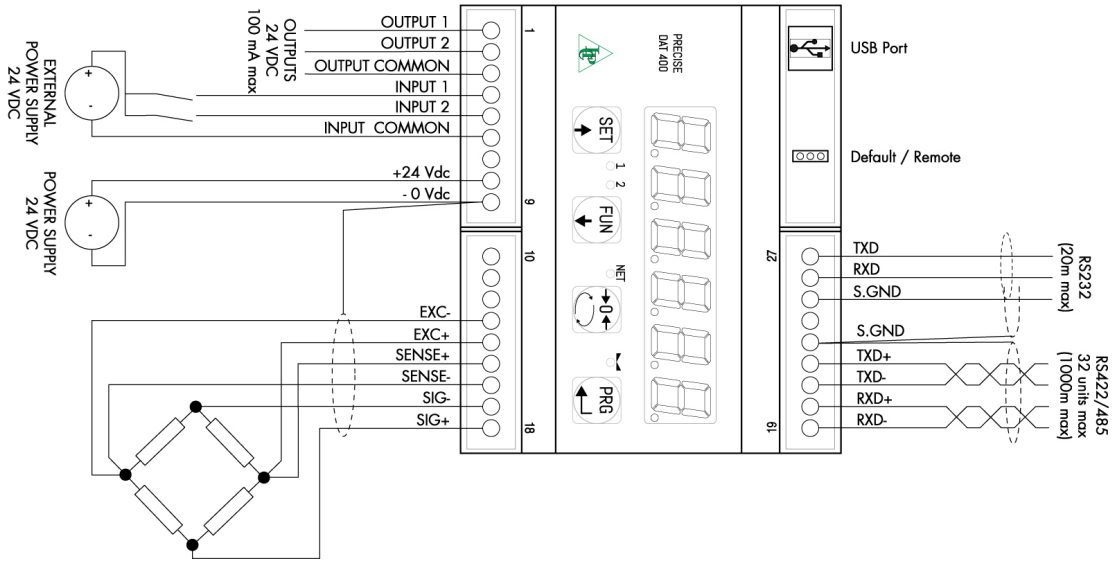

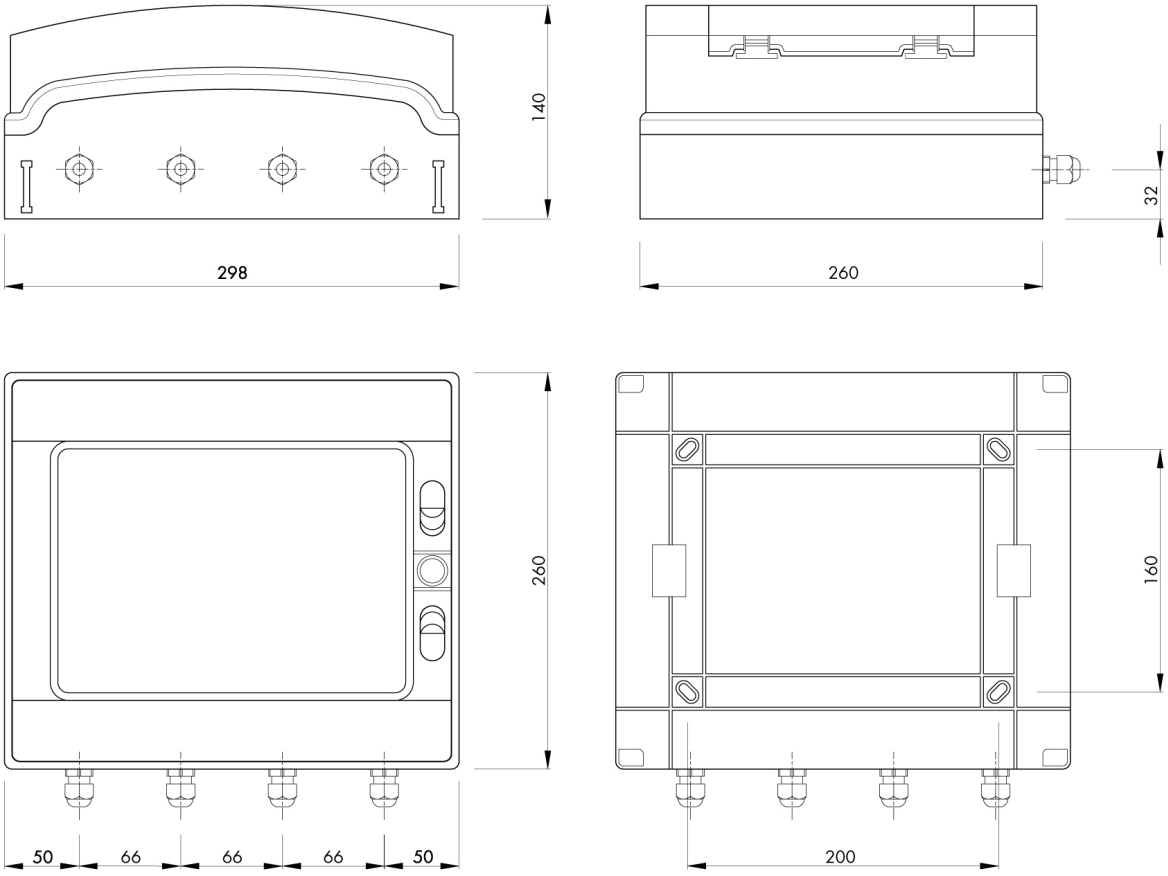

All indicated data may be changed without notice.
All the measures indicated are expressed in millimeters (mm).

PAVONE SISTEMI S.R.L.
Via Tiberio Bianchi 11/13/15, 20863 Concorezzo (MB), Milan, Italy
T (+39) 039 9162656 **F** (+39) 039 9162675 **W** pavonesistemi.com
Industrial Electronic Weighing Systems since 1963