Weight Transmitter **DAT 400 Devicenet**

available with certification • UL • GOST • OIML

General information

PWS21020261125

The DAT 400 Devicenet weight transmitter is sold exclusively by Pavone Systems and it guarantees high performance and reliability. DAT 400 Devicenet can be bought in combination with Tester 1008, which facilitates the upload and download functions for the programming. Configuration and calibration can be set up from the front panel or from a PC. The product can be customized according to customer's needs. It has a peak hold function for dynamic measures and screw terminal blocks.



Software Inovation 2: inovation_2_weighing_software.zip

Devicenet EDS file: dat_400_500_devicenet_eds.zip

Technical Manual: dat-400_en.pdf

Technical Manual: dat-400_fieldbus_en.pdf

All indicated data may be changed without notice.
All the measures indicated are expressed in millimeters (mm).

PAVONE SISTEMI S.R.L.
Via Tiberio Bianchi 11/13/15, 20863 Concorezzo (MB), Milan, Italy
T (+39) 039 9162656 **F** (+39) 039 9162675 **W** pavonesistemi.com
Industrial Electronic Weighing Systems since 1963

Technical specifications

PWS21020261125

Measuring range:	-0.5 ÷ +3.5 mV/V (-3.9 ÷ +3.9 mV/V optional)
Input sensitivity:	0.02 µV/count
Full scale non-Linearity:	<0.01%
Gain drift:	< 0.001% FS/°C
Display:	6 digit, red LED (7 segments), h 14 mm
A/D Converter:	24 bit
Internal Resolution:	> 16.000.000 points
Trasducer input voltage:	5 V (max 6 load cells 350 Ohm)
Visible resolution (in divisions):	60000
Divisions value (adjustable):	x1, x2, x5
Decimal figures range:	0 ÷ 3
Temperature range:	-10 ÷ +50°C (max umidity 85% without condensation)
Storage temperature:	-20 ÷ +70 °C
Filter:	0.1 ÷ 25 Hz
Logic output:	2 Solid-state relays, (maximum load 24 Vdc / 100 mA each)
Logic inputs:	2 optoisolated 24 Vcc PNP (External voltage)
Serial port:	USB, RS232C with ASCII or Modbus RTU protocols
Power supply:	24 Vcc ±15% - power 5 W
Regulatory compliance:	EN61326-1, EN55011 and EN55014 for EMC; EN61010-1 for electrical security
Fieldbus:	Devicenet
Dimensions and weight:	106 x 90 x 58 mm (L x H x P); 250 g
Baud rate:	2400, 9600, 19200, 38400, 115200 adjustable (for RS232)
Transmission distance:	15m (RS232C)

All indicated data may be changed without notice.
All the measures indicated are expressed in millimeters (mm).

Weight Transmitter **DAT 400 Devicenet**

available with certification • UL • GOST • OIML

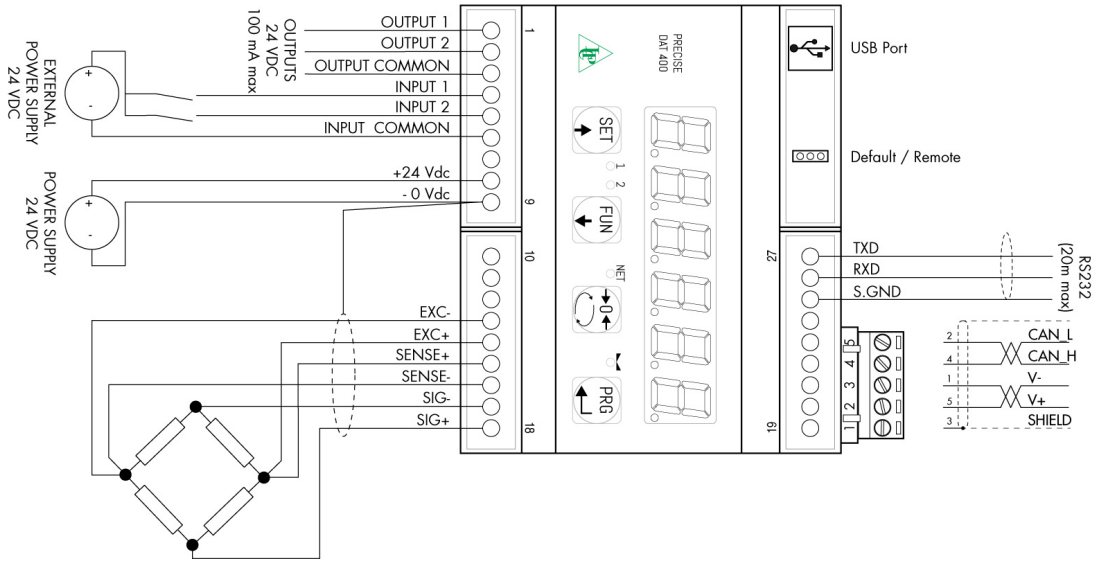

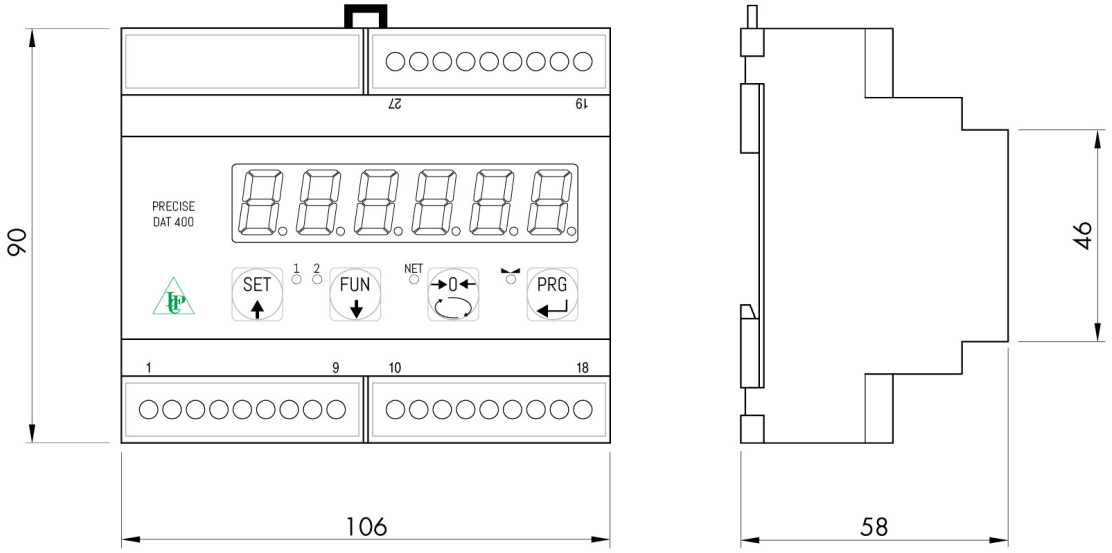

All indicated data may be changed without notice.
All the measures indicated are expressed in millimeters (mm).