Weight Indicator **MCT 1302 Analog + Profinet**

available with certification • OIML

Technical specifications

PWS32320240319

MCT 1302 Analog + Profinet is a touch screen weight indicator ideal for all types of weighing, in particular for static weighing and loading / unloading and multi-component dosing. The weight indicator MCT 1302 Analog + Profinet is practical, easy to install and can be customized as needed. It has a multilingual menu, internal data memory of 64 Kbytes expandable up to 1024 Kbytes and simultaneous availability of fieldbus and analogue output. The Software Optimation is given for free. This Software allows you to run certain activities such as calibration or monitoring directly from your computer. The Optimation software is provided by Pavone Systems and guarantees a perfect instrument run.

Legal for Trade:	certification available on request
Measuring range:	-3.9 ÷ +3.9 mV/V
Input sensitivity:	0.02 µV/count
Full scale non-Linearity:	<0.01 % full scale
Gain drift:	< 0.001% FS/°C
Display:	graphic LCD (240x128 pixel)
A/D Converter:	24 bit; internal resolution up to 16.000.000
Trasducer input voltage:	5 Vdc (max 8 load cells - 350 Ohm)
Frequency signal acquisition:	12 ÷ 1000 Hz
Visible resolution (in divisions):	999999
Divisions value (adjustable):	x1, x2, x5, x10, x20, x50; max 4 decimals
Temperature range:	-10 ÷ + 50°C (humidity max 85% no condensation)
Storage temperature:	-20 ÷ +70°C
Filter:	0.1 ÷ 250 Hz
Logic output:	6 opto-isolated; max 24 Vdc/100mA each
Logic input:	6 optically isolated 24 Vdc PNP (external power supply)
Additional I/O:	up to 4 external modules with 4 in/8-out each (16 in/32 out, total) by independent RS485
Serial port:	1 USB device + 1 RS232C + 1 RS485/Fieldbus
Analog output Non-Linearity:	< 0,02%
Temperature drift analog output:	0,001% FS/°C
Power supply:	18÷30 Vdc - Power consumption 5 W
Microcontroller:	ARM Cortex M0 + 32 bit 256KB Flash reprogrammable onboard from USB
Data storage:	64 Kbytes expandable to 1024 Kbytes
Regulatory compliance:	EN61000-6-2, EN61000-6-3 for EMC; EN61010-1 for Electrical Safety, EN45501 for metrology
Drilling template:	138 x 82 mm (L x H)
Dimensions:	150x95x26mm (LxWxH) including terminal blocks; 150x95x56mm (WxHxD) with fieldbus options
Fieldbus:	Profinet, MODUBUS/TCP, UDP, IP, ICMP, ARP

All indicated data may be changed without notice.
All the measures indicated are expressed in millimeters (mm).

PAVONE SISTEMI S.R.L.
Via Tiberio Bianchi 11/13/15, 20863 Concorezzo (MB), Milan, Italy
T (+39) 039 9162656 **F** (+39) 039 9162675 **W** pavonesistemi.com
Industrial Electronic Weighing Systems since 1963

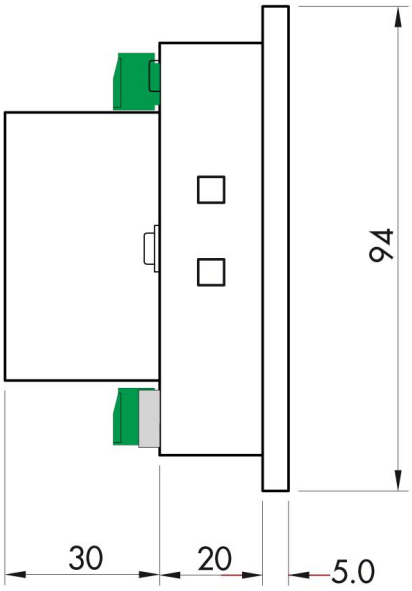

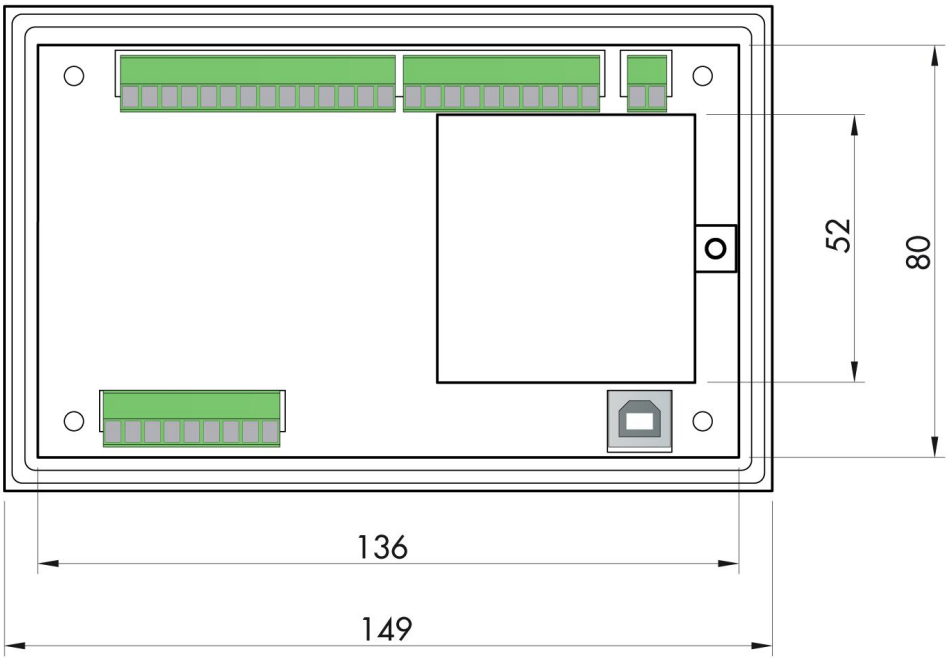

All indicated data may be changed without notice.
All the measures indicated are expressed in millimeters (mm).

PAVONE SISTEMI S.R.L.
Via Tiberio Bianchi 11/13/15, 20863 Concorezzo (MB), Milan, Italy
T (+39) 039 9162656 **F** (+39) 039 9162675 **W** pavonesistemi.com
Industrial Electronic Weighing Systems since 1963

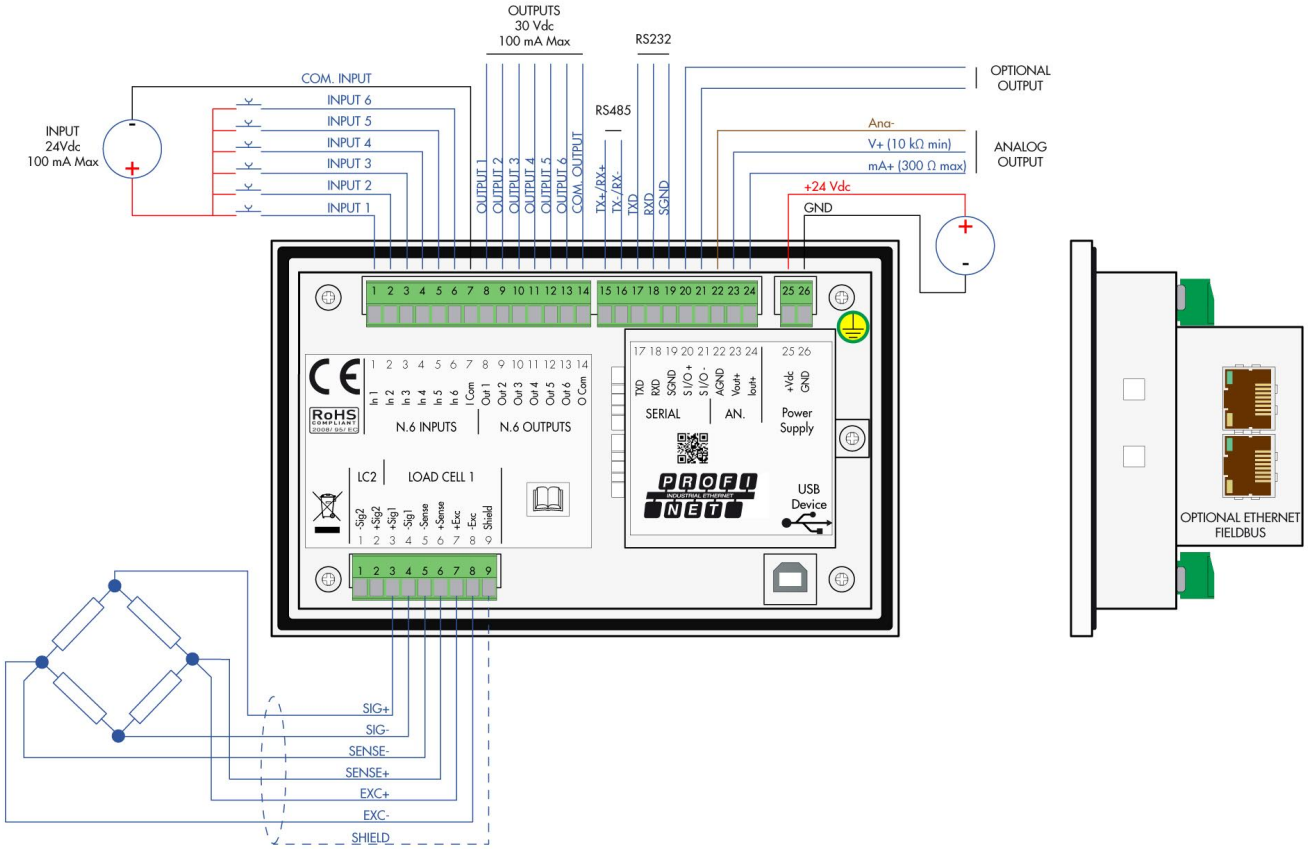

All indicated data may be changed without notice.
All the measures indicated are expressed in millimeters (mm).