Technical specifications

PWS11520261128

The KIP-1 product is a BLH NOBEL off-center tensiometric system used to avoid product breakage and machine jams with consequent production stops. Off-center load cells find many applications, for example in textile machines, converting, plastic films and winders. KIP-1 guarantees a high torsion resistance against torque forces and overload and it is easy to install.

Rated load RL:	10, 20 kN
Combined error:	±0.1 % RO
Repeatability:	0.02 % RO
Safe overload:	100 % RL
Ultimate overload:	200 % RL
Material:	Stainless steel
Degree of protection:	IP 67
Temperature range:	-40 ÷ + 80 (+ 100 optional) °C
Temperature effect on zero balance:	±0.005 % RO/°C
Temperature effect on output:	±0.005 % output/ °C
Rated output RO:	1.020 mV/V
Zero balance:	±2 % RO
Insulation resistance:	>4 G Ohm
Input resistance:	382 ±3 Ohm
Output resistance:	350 ±3 Ohm
Recommended input:	10 Vdc/ac
Maximum supply voltage:	18 Vdc/ac
Rated output tolerance:	±0.25



All indicated data may be changed without notice.
All the measures indicated are expressed in millimeters (mm).

PAVONE SISTEMI S.R.L.
Via Tiberio Bianchi 11/13/15, 20863 Concorezzo (MB), Milan, Italy
T (+39) 039 9162656 **F** (+39) 039 9162675 **W** pavonesistemi.com
Industrial Electronic Weighing Systems since 1963

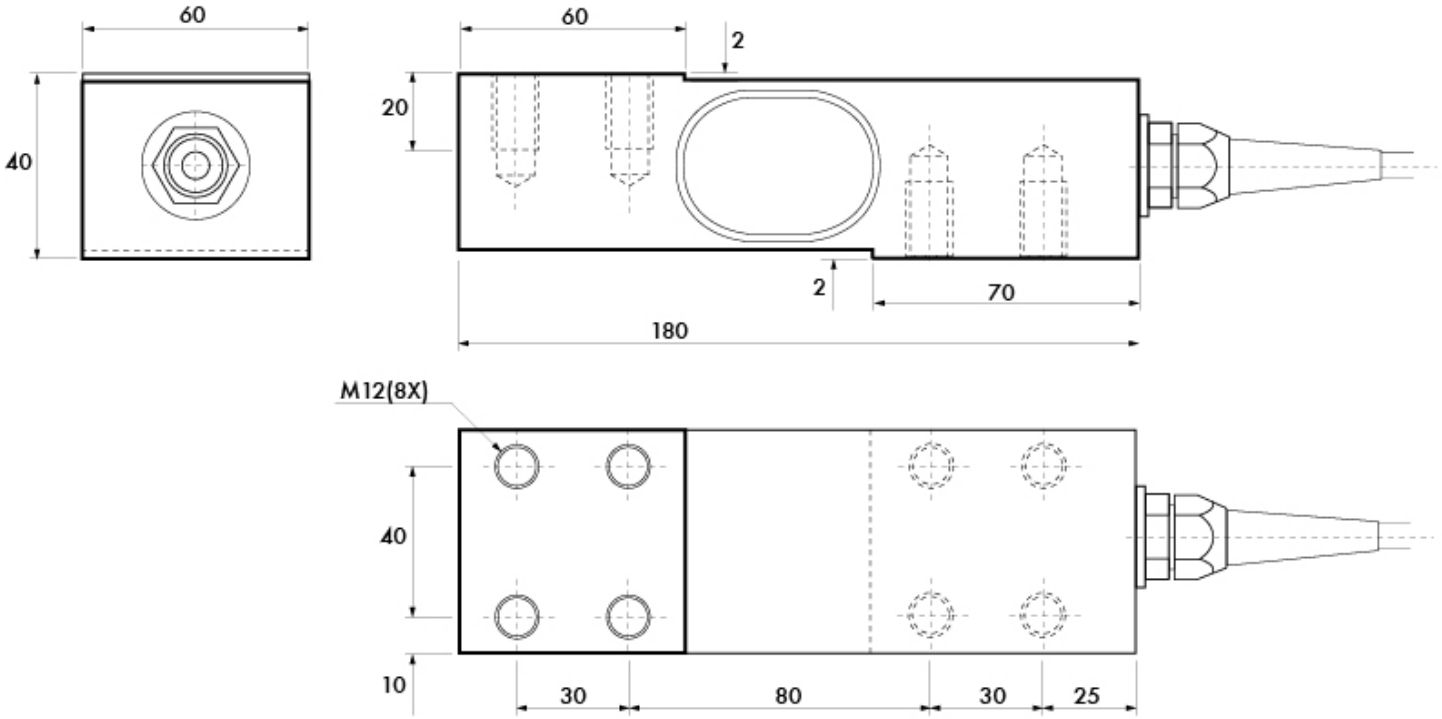

All indicated data may be changed without notice.
All the measures indicated are expressed in millimeters (mm).

PAVONE SISTEMI S.R.L.
Via Tiberio Bianchi 11/13/15, 20863 Concorezzo (MB), Milan, Italy
T (+39) 039 9162656 **F** (+39) 039 9162675 **W** pavonesistemi.com
Industrial Electronic Weighing Systems since 1963

APPLICAZIONE TIPICA

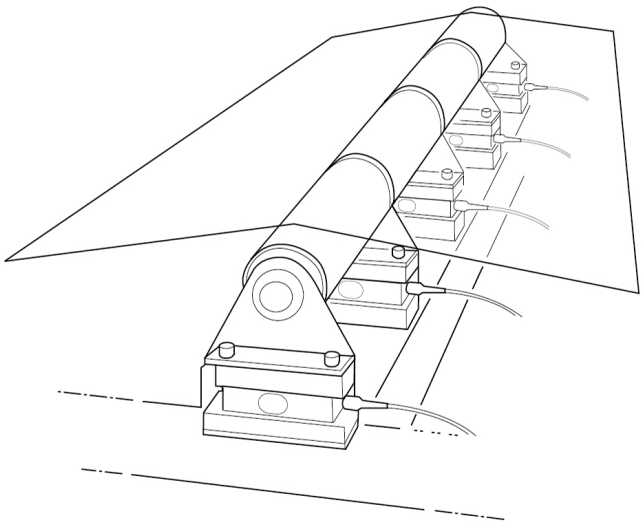

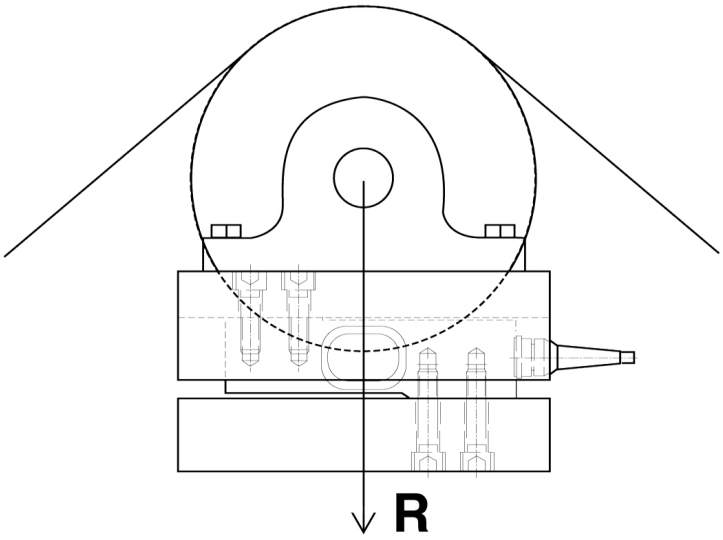

All indicated data may be changed without notice.
All the measures indicated are expressed in millimeters (mm).

PAVONE SISTEMI S.R.L.
Via Tiberio Bianchi 11/13/15, 20863 Concorezzo (MB), Milan, Italy
T (+39) 039 9162656 **F** (+39) 039 9162675 **W** pavonesistemi.com
Industrial Electronic Weighing Systems since 1963