Tedea load cell **240**

available with certification • OIML • NTEP

General information

PWS34420261124

The Model 240 is speciically designed to be used where the fast acquisition of a stable load signal is paramount. The Model 240's unique fluid damping system allows the load cell to be used in applications that previously required the use of LVDT's or similar measuring devices. The Model 240 brings load cell adaptability into check weighing and grading applications. Approved to OIML R60 and NTEP standards, sealed to IP66 level and available in coated steel or stainless steel, the Model 240 is suitable for most wash-down applications. The two additional sense wires feed back the voltage reaching the load cell. Complete compensation of changes in lead resistance due to temperature change and/or cable extension, is achieved by feeding this voltage into the appropriate electronics.

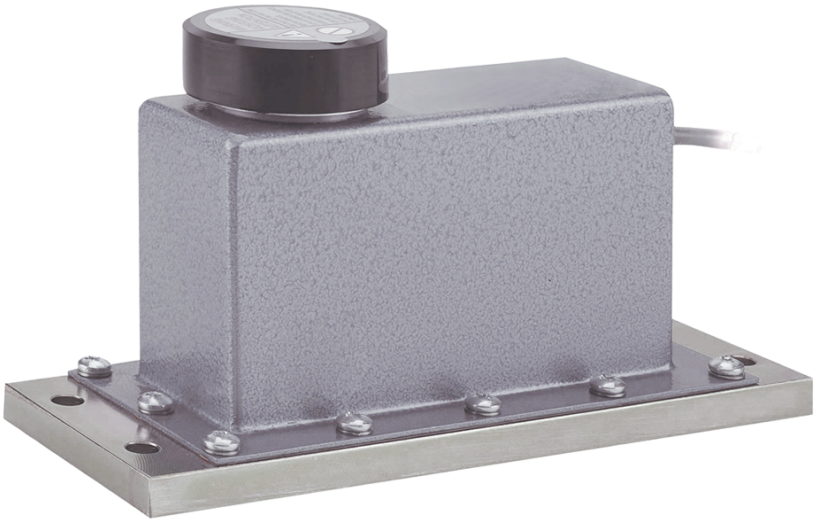

Suggested related products

A highly performing weighing system must be accurate, perfectly calibrated and well maintained. In order to improve the load cell performance and to optimize its functioning, you may need the following products:

Weight Transmitter DAT 1400

Weight Indicator MCT 1302

Tester 1008 TESTER 1008

Junction Box CGS4-C

All indicated data may be changed without notice.
All the measures indicated are expressed in millimeters (mm).

PAVONE SISTEMI S.R.L.
Via Tiberio Bianchi 11/13/15, 20863 Concorezzo (MB), Milan, Italy
T (+39) 039 9162656 **F** (+39) 039 9162675 **W** pavonesistemi.com
Industrial Electronic Weighing Systems since 1963

Technical specifications

PWS34420261124

Rated Load (RL):	2, 3, 5, 7, 10, 15, 20, 30, 50 kg
Ultimate overload:	300 % RL
Material:	Painted mild steel
Degree of protection:	IP66
Accuracy class:	C3
Compensated Temperature:	-10 ÷ +40°C
Temperature range:	-30 ÷ +70°C
Temperature effect on zero balance:	±0.0026 % (NTEP); NA (Non Approved); ±0.0026 % (C3) RO/°C
Temperature effect on output:	±0.0010 % (NTEP); NA (Non Approved); ±0.0010 % (C3) RO/°C
Rated output RO:	2 mV/V
Zero balance:	±0.10 mV/V
Insulation resistance:	> 1000 MOhm
Input impedance:	415±15 Ohm
Maximum input voltage:	15 Vdc or Vac rms
Nominal input voltage:	10 Vdc or Vac rms
Cable Lenght:	To suit m
Output impedance:	350±3 Ohm

All indicated data may be changed without notice.
All the measures indicated are expressed in millimeters (mm).

PAVONE SISTEMI S.R.L.
Via Tiberio Bianchi 11/13/15, 20863 Concorezzo (MB), Milan, Italy
T (+39) 039 9162656 **F** (+39) 039 9162675 **W** pavonesistemi.com
Industrial Electronic Weighing Systems since 1963

Tedea load cell **240**

available with certification • OIML • NTEP

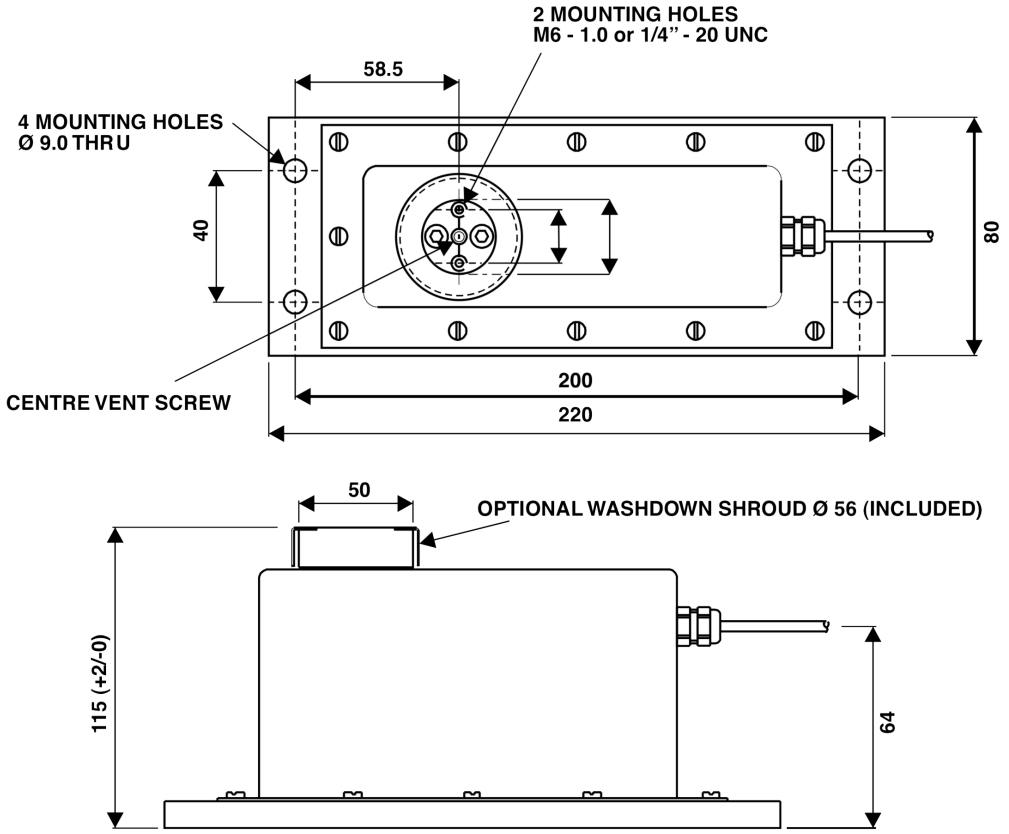

Wiring Schematic Diagram	
+VE INPUT	Green
+VE SENSE	Blue
+VE OUTPUT	Red
-INPUT	Black
-VE SENSE	Brown
-OUTPUT	White

All indicated data may be changed without notice.
All the measures indicated are expressed in millimeters (mm).

PAVONE SISTEMI S.R.L.
Via Tiberio Bianchi 11/13/15, 20863 Concorezzo (MB), Milan, Italy
T (+39) 039 9162656 **F** (+39) 039 9162675 **W** pavonesistemi.com
Industrial Electronic Weighing Systems since 1963