Tedea load cell **1042**

available with certification • ATEX • OIML • NTEP • FM • IECEx

General information

PWS34820261125

The Model 1042 is a low proile single-point load cell designed for direct mounting in weighing platforms. Its small physical size, combined with high accuracy and low cost, makes this load cell ideally suited for retail, bench and counting scales. Capacities of 5 kg and above are supplied as standard in anodized aluminum. This high accuracy load cell is approved to NTEP and other stringent approval standards, including OIML R60. A humidity resistant protective coating assures long-term stability over the entire compensated temperature range. The two additional sense wires feed back the voltage reaching the load cell. Complete compensation of changes in lead resistance due to temperature change and/or cable extenstion, is achieved by feeding this voltage into the appropriate electronics.



Suggested related products

A highly performing weighing system must be accurate, perfectly calibrated and well maintained. In order to improve the load cell performance and to optimize its functioning, you may need the following products:

Weight Transmitter DAT 1400

Weight Indicator MCT 1302

Tester 1008 TESTER 1008

Junction Box CGS4-C

All indicated data may be changed without notice.
All the measures indicated are expressed in millimeters (mm).

PAVONE SISTEMI S.R.L.
Via Tiberio Bianchi 11/13/15, 20863 Concorezzo (MB), Milan, Italy
T (+39) 039 9162656 **F** (+39) 039 9162675 **W** pavonesistemi.com
Industrial Electronic Weighing Systems since 1963

Technical specifications

PWS34820261125

Rated Load (RL):	1*, 3, 5, 7, 10, 15, 20, 30, 50, 75, 100, 150**, 200* ** kg * no OIML; ** no NTEP
Ultimate overload:	300 % RL
Material:	Plated (anodize) aluminium
Degree of protection:	IP66
Compensated Temperature:	-10 ÷ +40°C
Temperature range:	-30 ÷ +70°C
Temperature effect on zero balance:	±0.0014 % (NTEP); ±0.0100 % (Non Approved); ±0.0023 % (C3); ±0.0014 % (C6); RO/°C
Temperature effect on output:	±0.0010 % (NTEP); ±0.0030 % (Non Approved); ±0.0010 % (C3); ±0.00058 % (C6); RO/°C
Rated output RO:	2 mV/V
Zero balance:	±0.20 mV/V
Insulation resistance:	> 2000 MOhm
Input impedance:	415±20 Ohm
Maximum input voltage:	15 Vdc or Vac rms
Nominal input voltage:	10 Vdc or Vac rms
Cable Lenght:	1 m
Load plan:	400x400
Output impedance:	350±3 Ohm

All indicated data may be changed without notice.
All the measures indicated are expressed in millimeters (mm).

Tedea load cell **1042**

available with certification • ATEX • OIML • NTEP • FM • IECEx

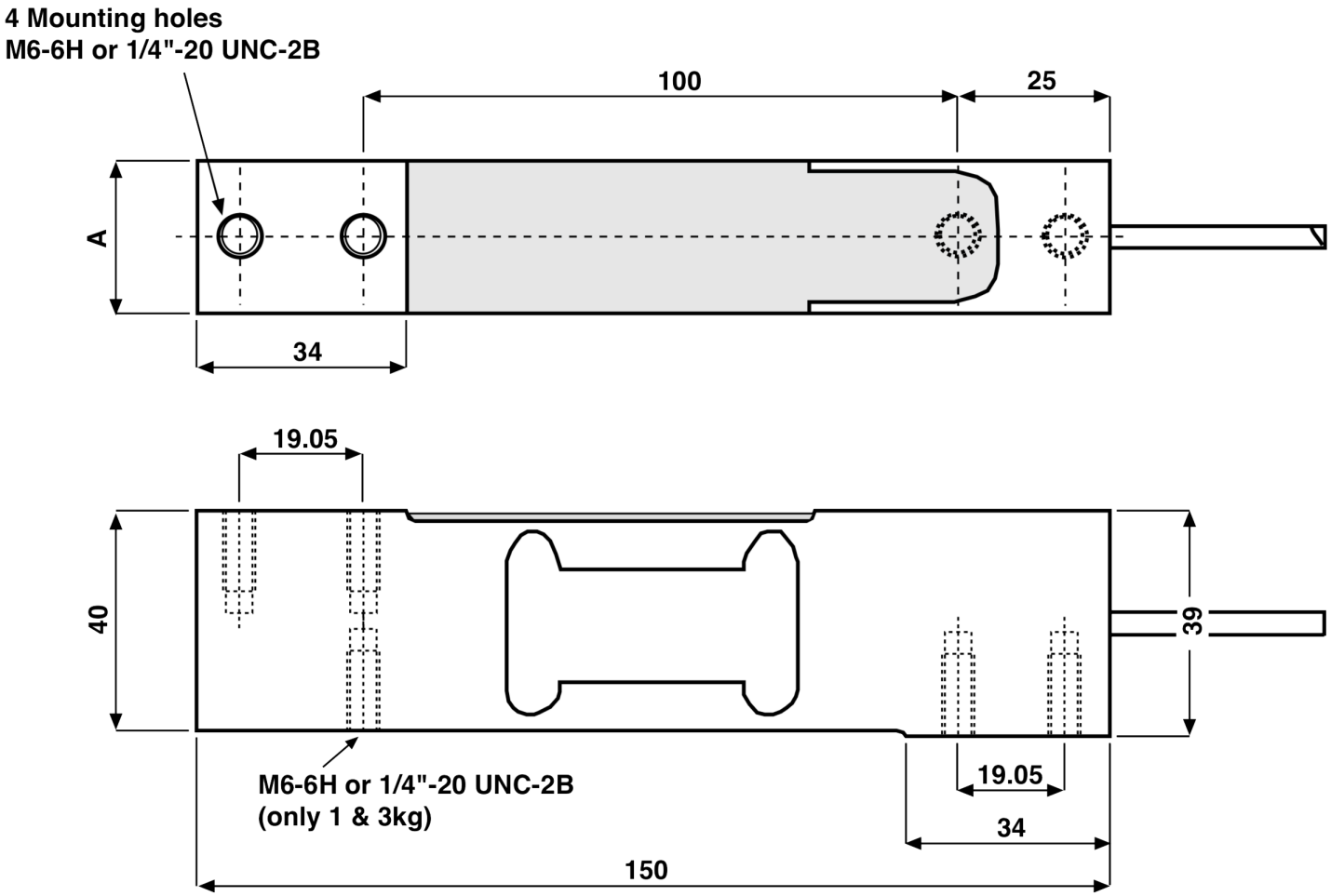

Wiring Schematic Diagram	
BALANCED & UNBALANCED BRIDGE CONFIGURATION	
+VE INPUT	Green
+VE SENSE	Blue
+VE OUTPUT	Red
-INPUT	Black
-VE SENSE	Brown
-OUTPUT	White

CAPACITY	A
1 - 30 kg	20
50 - 200 kg	25.4

All indicated data may be changed without notice.
All the measures indicated are expressed in millimeters (mm).

PAVONE SISTEMI S.R.L.
Via Tiberio Bianchi 11/13/15, 20863 Concorezzo (MB), Milan, Italy
T (+39) 039 9162656 **F** (+39) 039 9162675 **W** pavonesistemi.com
Industrial Electronic Weighing Systems since 1963