Tedea load cell **1010/1015**

available with certification • NTEP • FM

General information

PWS34720261123

The Model 1010 is a single-point load cell designed for direct mounting of low cost, low capacity weighing platforms. Its use in large platforms, combined with its high accuracy and low cost, makes this load cell ideally suited for a large range of weighing applications, including bench scales and counting scales. A special humidity resistant protective coating is available which ensures long-term reliability. The Model 1010's built-in overload stop can provide mechanical protection against overloading. The two additional sense wires feed back the voltage reaching the load cell. Complete compensation of changes in lead resistance due to temperature change and/or cable extension is achieved by feeding this voltage into the appropriate electronics.



Suggested related products

A highly performing weighing system must be accurate, perfectly calibrated and well maintained. In order to improve the load cell performance and to optimize its functioning, you may need the following products:

Weight Transmitter DAT 1400

Weight Indicator MCT 1302

Tester 1008 TESTER 1008

Junction Box CGS4-C

All indicated data may be changed without notice.
All the measures indicated are expressed in millimeters (mm).

PAVONE SISTEMI S.R.L.
Via Tiberio Bianchi 11/13/15, 20863 Concorezzo (MB), Milan, Italy
T (+39) 039 9162656 **F** (+39) 039 9162675 **W** pavonesistemi.com
Industrial Electronic Weighing Systems since 1963

Technical specifications

PWS34720261123

Rated Load (RL):	3*, 5, 7, 10, 15, 20, 30, 50, 90* kg *no NTEP
Ultimate overload:	300 % RL
Material:	Plated (anodize) aluminium
Degree of protection:	IP65, IP67
Compensated Temperature:	-10 ÷ +40°C
Temperature range:	-20 ÷ +70°C
Temperature effect on zero balance:	±0.0023 % (NTEP); ±0.004 % (Non Approved) RO/°C
Temperature effect on output:	±0.001 % (NTEP); ±0.0010 % (Non Approved) RO/°C
Rated output RO:	2 mV/V
Zero balance:	±0.20 mV/V
Insulation resistance:	> 5000 MOhm
Input impedance:	415±15 Ohm
Maximum input voltage:	15 Vdc or Vac rms
Nominal input voltage:	10 Vdc or Vac rms
Cable Lenght:	1 m
Load plan:	Up to 30kg 40x40; Over 30kg 35x35
Output impedance:	350±3 Ohm

All indicated data may be changed without notice.
All the measures indicated are expressed in millimeters (mm).

Tedea load cell **1010/1015**

available with certification • NTEP • FM

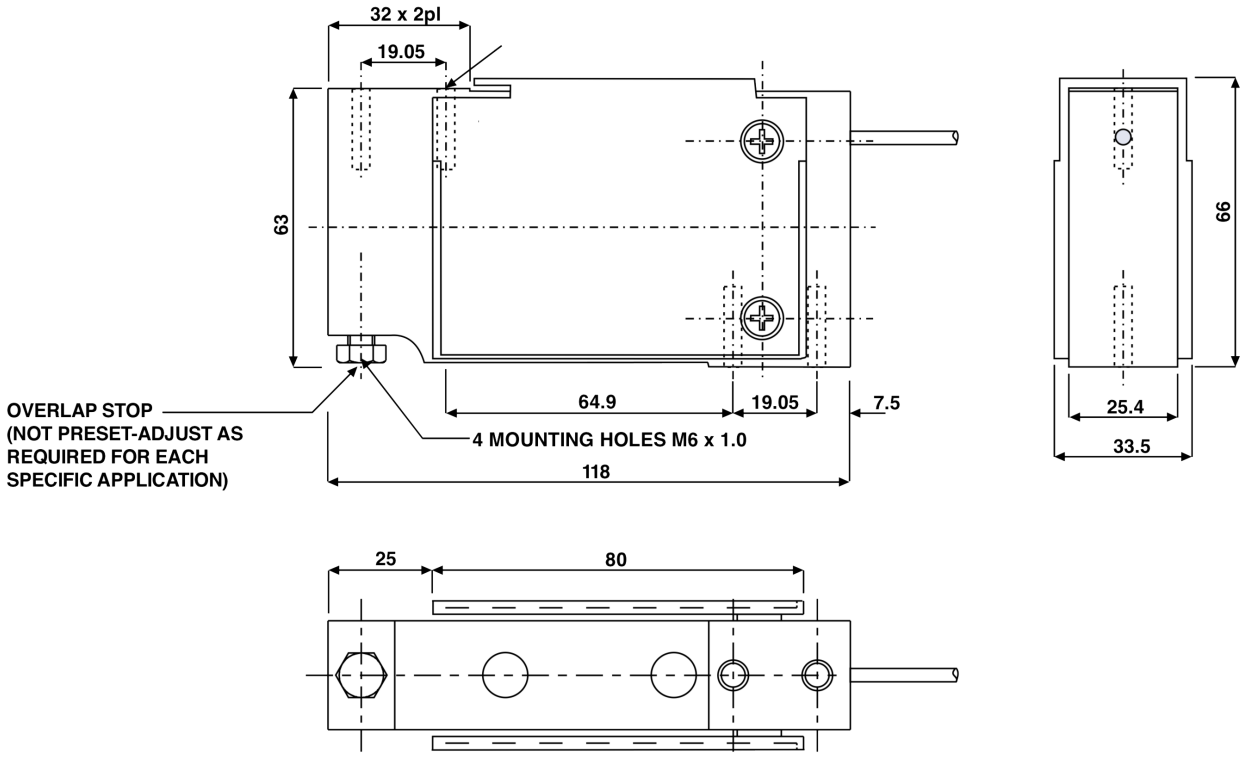

Wiring Schematic Diagram (1010)	
UNBALANCED BRIDGE CONFIGURATION	
+VE INPUT	Green
+VE SENSE	Blue
+VE OUTPUT	Red
-INPUT	Black
-VE SENSE	Brown
-OUTPUT	White

Wiring Schematic Diagram (1015)	
BALANCED TEMPERATURE COMPENSATION	
+VE INPUT	Green
+VE SENSE	Blue
+VE OUTPUT	Red
-INPUT	Black
-VE SENSE	Brown
-OUTPUT	White

All indicated data may be changed without notice.
All the measures indicated are expressed in millimeters (mm).

PAVONE SISTEMI S.R.L.
Via Tiberio Bianchi 11/13/15, 20863 Concorezzo (MB), Milan, Italy
T (+39) 039 9162656 **F** (+39) 039 9162675 **W** pavonesistemi.com
Industrial Electronic Weighing Systems since 1963