General information

PWS1720261126

The SBR shear beam load cell, made of stainless steel and hermetically sealed, has been designed for the fiscal weighing of low-profile hoppers, tanks, belts and platforms, is 100% resistant to side loads and has a 6-conductor shielded cable 5 meters long. Furthermore, the MH MOUNTING KIT mounting accessory is available for this load cell and allows an easy assembly and installation. Also available in nickel-plated steel (SBRA model).



Suggested related products

A highly performing weighing system must be accurate, perfectly calibrated and well maintained. In order to improve the load cell performance and to optimize its functioning, you may need the following products:

Weight Transmitter DAT 1400

Weight Indicator MCT 1302

Mounting kits MKX ®

Mounting kits MH MOUNTING KIT

Tester 1008 TESTER 1008

Junction Box CGS4-C

All indicated data may be changed without notice.
All the measures indicated are expressed in millimeters (mm).

PAVONE SISTEMI S.R.L.
Via Tiberio Bianchi 11/13/15, 20863 Concorezzo (MB), Milan, Italy
T (+39) 039 9162656 **F** (+39) 039 9162675 **W** pavonesistemi.com
Industrial Electronic Weighing Systems since 1963

Technical specifications

PWS1720261126

Rated load (RL):	300, 500, 750, 1000, 1500, 2000, 3000, 5000, 7500, 10000 Kg
Combined error:	< ±0.017 % RO
Repeatability:	< ±0,015 % RO
Creep (30 minutes):	< ±0.016 % RO
Safe overload:	150 % RL
Ultimate overload:	200 % RL
Clamping force without any load:	RL 300 ÷ 2000 kg: 136 Nm; RL 3000 ÷ 5000 kg: 205 Nm
Accuracy class:	3000 OIML
Deflection:	0.2 ÷ 0.4 mm
Compensated Temperature:	-10 ÷ +40 °C
Temperature range:	-30 ÷ +70 °C
Temperature effect on zero balance:	< ±0.01 % RO/5 °C
Temperature effect on output:	< ±0.006 % RO/5 °C
Rated output RO:	2 mV/V ±0.05 %
Zero balance:	< ±2 % RO
Insulation resistance:	> 5000 MOhm
Input resistance:	400 ±20 Ohm
Output resistance:	350 ±3 Ohm
Recommended input:	5 ÷ 15 Vdc/Vac
Degree of protection:	IP68 - IP69K

All indicated data may be changed without notice.
All the measures indicated are expressed in millimeters (mm).

Shear beam load cells **SBR**

available with certification • ATEX • OIML

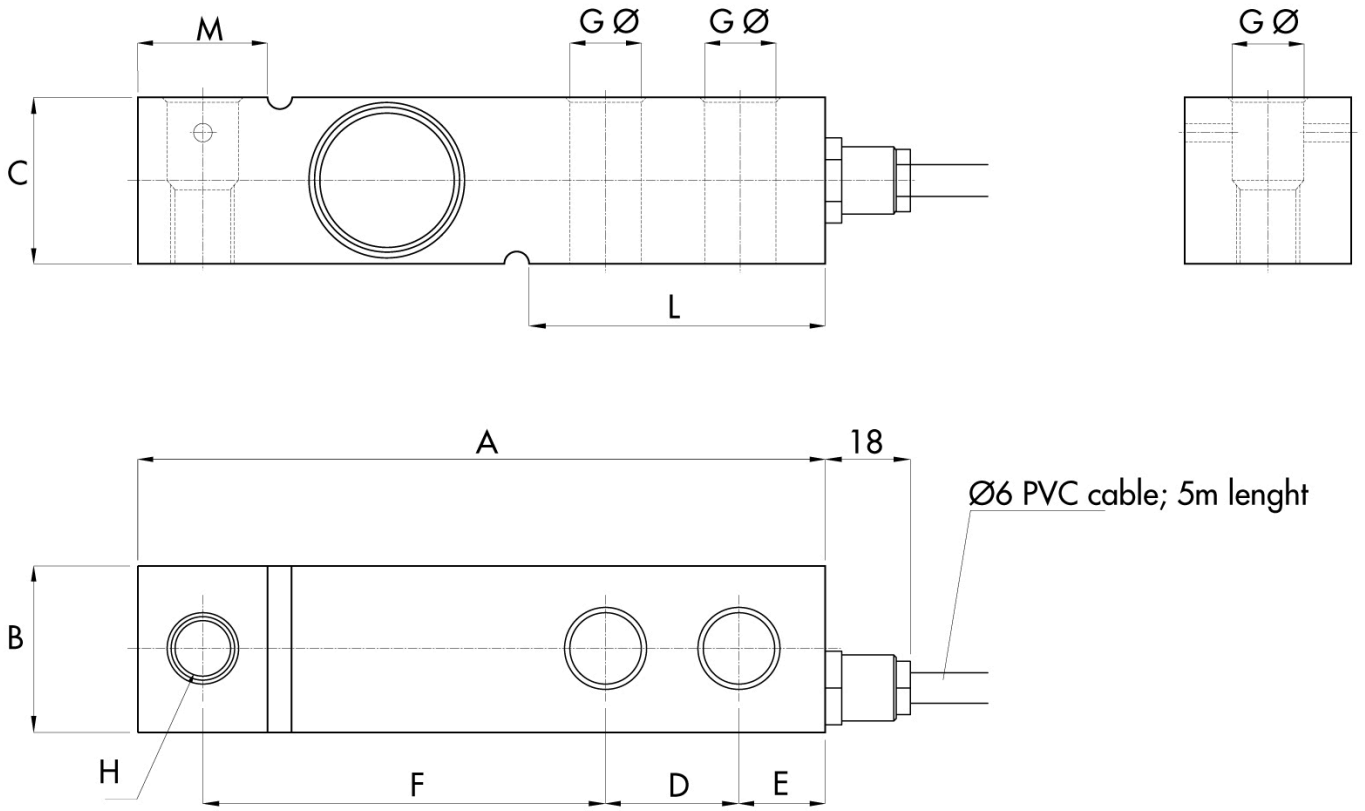

Electrical Connections	
+Excitation	Green
-Excitation	Black
+Sense	Blue
-Sense	Yellow
+Signal	Red
-Signal	White
Shield	Cable Shield

Capacity Kg	300-2000	3000-5000
A	130	171.5
B	31.5	41.5
C	31.5	48
D	25.4	38.1
E	15.8	19
F	76.2	95.2
G	13.5	20.5
H	M12x1.75	M20x2.5
L	56	76
M	24.6	37

All indicated data may be changed without notice.
All the measures indicated are expressed in millimeters (mm).

PAVONE SISTEMI S.R.L.
Via Tiberio Bianchi 11/13/15, 20863 Concorezzo (MB), Milan, Italy
T (+39) 039 9162656 **F** (+39) 039 9162675 **W** pavonesistemi.com
Industrial Electronic Weighing Systems since 1963

Capacity 7.500 ÷ 10.000 Kg

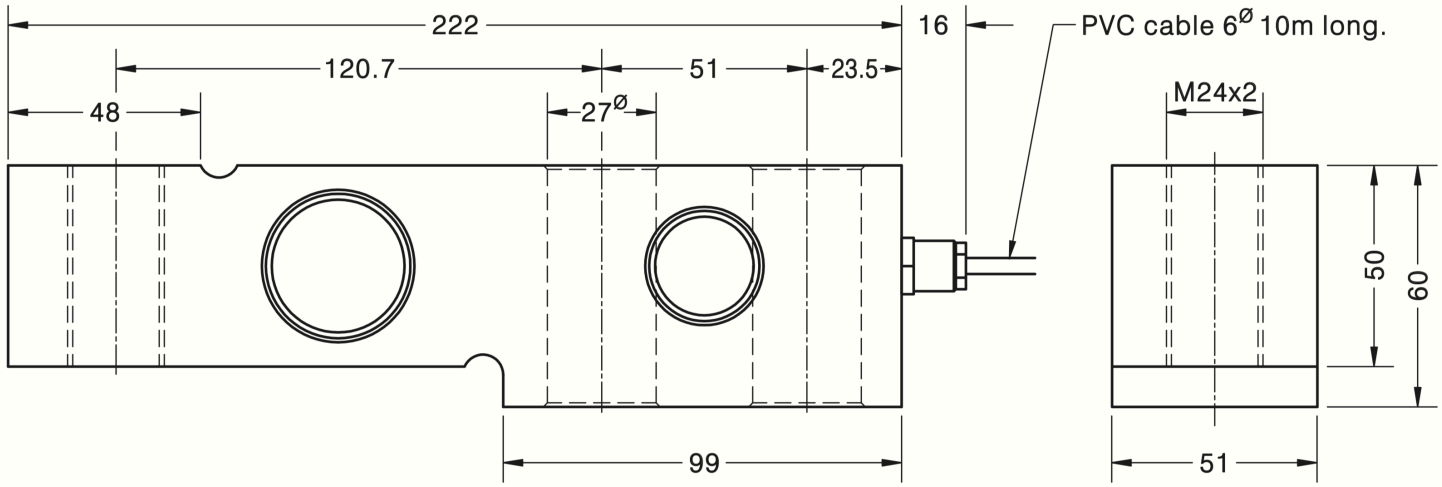

Electrical Connections	
+Excitation	Green
-Excitation	Black
+Sense	Blue
-Sense	Yellow
+Signal	Red
-Signal	White
Shield	Cable Shield

All indicated data may be changed without notice.
All the measures indicated are expressed in millimeters (mm).