Off Center load cell **U2D1**

available with certification • OIML

General information

PWS4520261124

The off center load cell U2D1 is insensitive to off-weight weights and is particularly suitable for the construction of industrial and bench electronic scales, piece counters and packaging machines. The single point cell U2D1 guarantees high precision and maximum long-term reliability. The cell U2D1 has a 4-core shielded cable that is 30 cm long and flat with a maximum size of 400 x 600 mm.



Suggested related products

A highly performing weighing system must be accurate, perfectly calibrated and well maintained. In order to improve the load cell performance and to optimize its functioning, you may need the following products:

Weight Transmitter UWT 6008

Weight Transmitter DAT 1400

Weight Indicator MCT 1302

Tester 1008 TESTER 1008

Off Center load cell CB004

Junction Box CGS4-C

All indicated data may be changed without notice.
All the measures indicated are expressed in millimeters (mm).

PAVONE SISTEMI S.R.L.
Via Tiberio Bianchi 11/13/15, 20863 Concorezzo (MB), Milan, Italy
T (+39) 039 9162656 **F** (+39) 039 9162675 **W** pavonesistemi.com
Industrial Electronic Weighing Systems since 1963

Technical specifications

PWS4520261124

Rated load (RL):	3, 6, 10, 15, 20, 25, 50, 100 Kg
Repeatability:	±0.02 % RO
Creep (20 minutes):	±0,02 % RO
Full scale non-Linearity:	< ±0.0125 % RO
Safe overload:	200 % RL
Ultimate overload:	300 % RL
Material:	Aluminum alloy
Degree of protection:	IP40
Deflection:	0.38 ÷ 0.56 mm
Compensated Temperature:	-10 ÷ +50 °C
Temperature range:	-10 ÷ +50 °C
Temperature effect on zero balance:	±0.004 % RO/°C
Temperature effect on output:	±0.0012 % load/°C
Rated output RO:	2 mV/V ±0.2
Zero balance:	< ±0.1 mV/V
Insulation resistance:	> 2000 MOhm
Input resistance:	400 ÷ 450 Ohm
Output resistance:	345 ÷ 355 Ohm
Recommended input:	5 ÷ 12 Vdc/ac

All indicated data may be changed without notice.
All the measures indicated are expressed in millimeters (mm).

Off Center load cell **U2D1**

available with certification • OIML

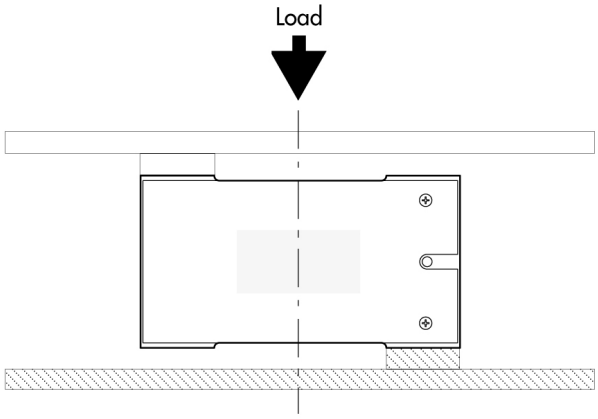

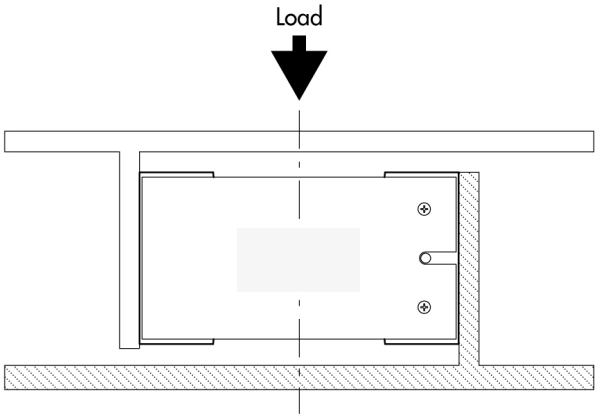

Electrical Connection	
+Excitation	Red
-Excitation	White
+Signal	Green
-Signal	Blue

To Know
Error is within 0.02% SN applied with 1/2 of capacity at the position of 150mm of eccentricity
The center of loading plate and the center of the load cell should be the same position

All indicated data may be changed without notice.
All the measures indicated are expressed in millimeters (mm).

PAVONE SISTEMI S.R.L.
Via Tiberio Bianchi 11/13/15, 20863 Concorezzo (MB), Milan, Italy
T (+39) 039 9162656 **F** (+39) 039 9162675 **W** pavonesistemi.com
Industrial Electronic Weighing Systems since 1963

Off Center load cell **U2D1**

available with certification • OIML

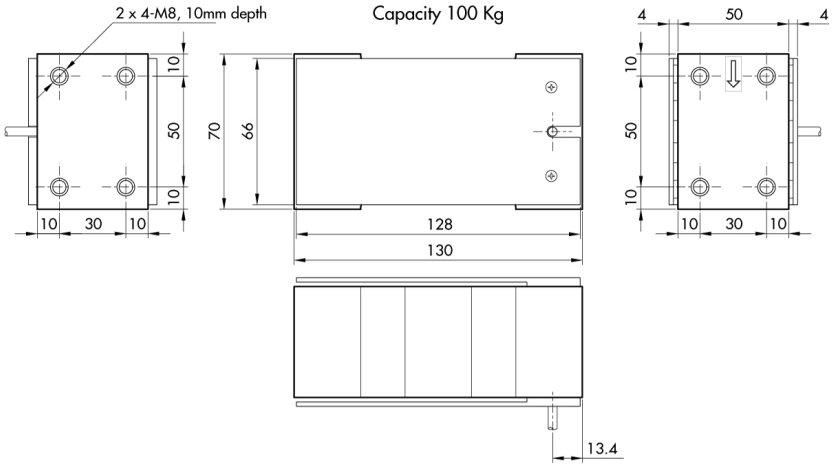

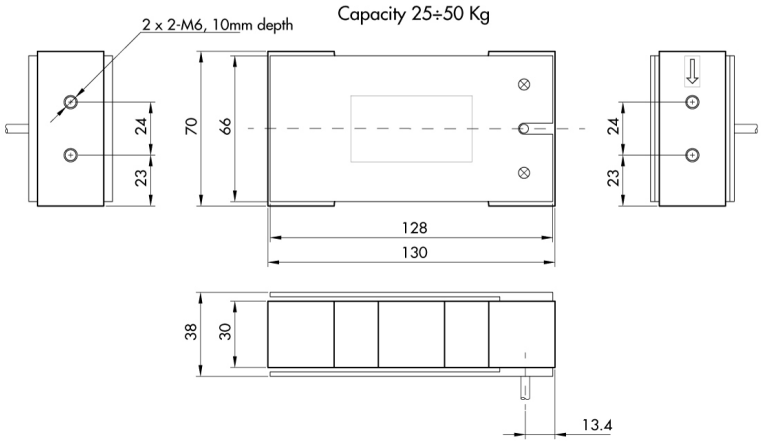

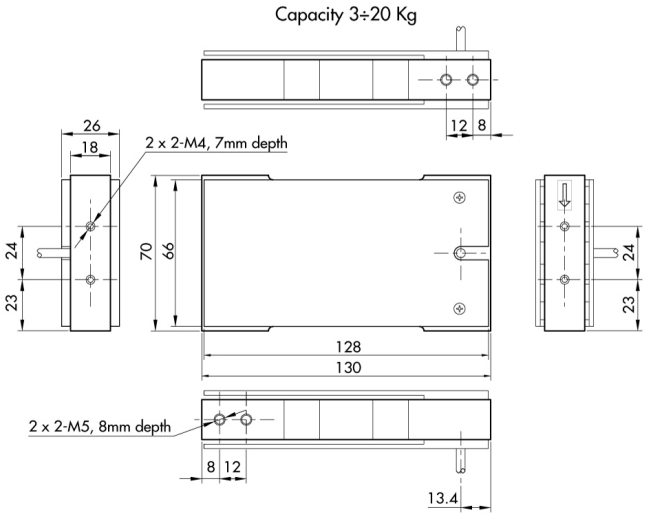

All indicated data may be changed without notice.
All the measures indicated are expressed in millimeters (mm).

PAVONE SISTEMI S.R.L.
Via Tiberio Bianchi 11/13/15, 20863 Concorezzo (MB), Milan, Italy
T (+39) 039 9162656 **F** (+39) 039 9162675 **W** pavonesistemi.com
Industrial Electronic Weighing Systems since 1963