Off Center load cell **SPI**

General information

PWS16520261123

The off center load cell SPI, built in stainless steel, is robust and precise and is equipped with a 6-meter shielded 6-conductor cable for the electrical connection. The single point cell SPI is ideal for large single-cell platforms and guarantees accuracy in any position the object is loaded. The SPI cell is used in the food packaging sector and for the construction of single-cell scales.



Suggested related products

A highly performing weighing system must be accurate, perfectly calibrated and well maintained. In order to improve the load cell performance and to optimize its functioning, you may need the following products:

Tester 1008 TESTER 1008

Junction Box CGS4-C

Flow Regulator For Belt and loss in weight touch MC 353

Batching Tool MCT 1302 Batch

All indicated data may be changed without notice.
All the measures indicated are expressed in millimeters (mm).

PAVONE SISTEMI S.R.L.
Via Tiberio Bianchi 11/13/15, 20863 Concorezzo (MB), Milan, Italy
T (+39) 039 9162656 **F** (+39) 039 9162675 **W** pavonesistemi.com
Industrial Electronic Weighing Systems since 1963

Technical specifications

PWS16520261123

Rated load (RL):	10, 30, 50, 100, 200 Kg
Combined error:	< ±0.03 % RO
Repeatability:	< ±0.02 % RO
Creep (30 minutes):	±0.03 % RO
Safe overload:	150 % RL
Ultimate overload:	300 % RL
Material:	Stainless steel AISI 420
Degree of protection:	IP67
Deflection:	0.5 mm
Compensated Temperature:	-10 ÷ +40 °C
Temperature range:	-20 ÷ +60 °C
Temperature effect on zero balance:	< ±0.0025 % RO/°C
Temperature effect on output:	< ±0.0025 % RO/°C
Rated output RO:	2 mV/V ±10 %
Zero balance:	±1 % RO
Insulation resistance:	> 2000 MOhm
Input resistance:	385 ±30 Ohm
Output resistance:	350 Ohm ±3
Recommended input:	5 ÷ 12 Vdc/ac

All indicated data may be changed without notice.
All the measures indicated are expressed in millimeters (mm).

Off Center load cell **SPI**

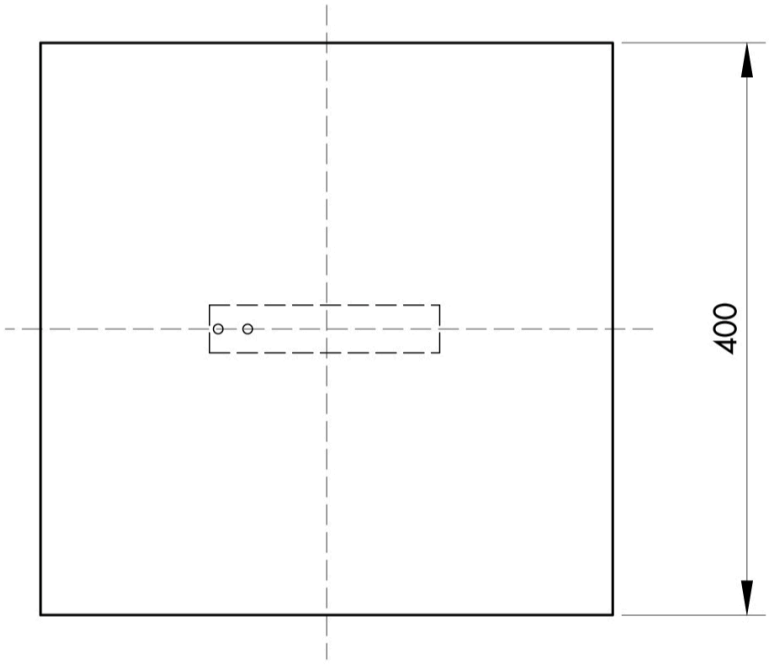

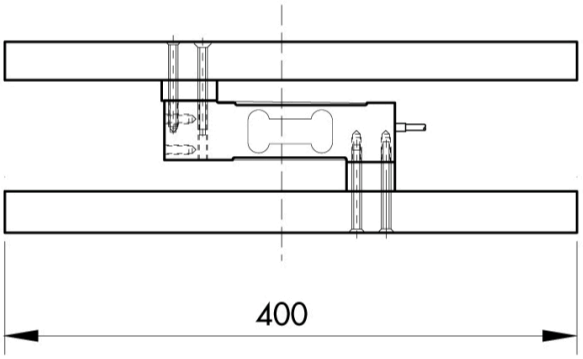

Electrical Connection	
+ Excitation	Red
- Excitation	Black
+ Sense	Blue
- Sense	Yellow
+ Signal	Green
- Signal	White
Shield	Cable Shield

Error is within 0.02% SN applied with 1/2 of capacity at the position of 200mm of eccentricity

The center of loading plate and also the center of the load cell should be the same position

All indicated data may be changed without notice.
All the measures indicated are expressed in millimeters (mm).

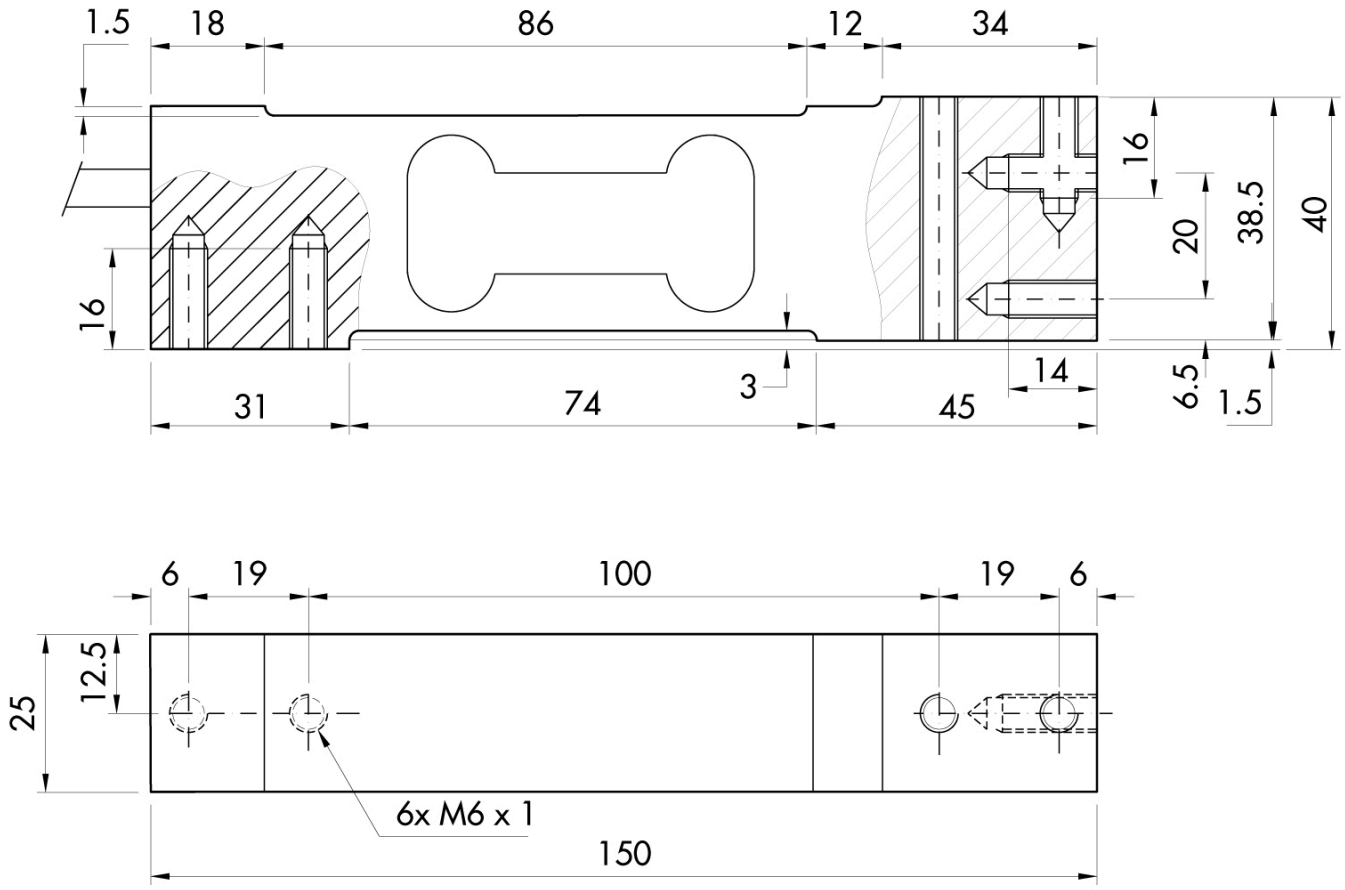

All indicated data may be changed without notice.
All the measures indicated are expressed in millimeters (mm).

PAVONE SISTEMI S.R.L.
Via Tiberio Bianchi 11/13/15, 20863 Concorezzo (MB), Milan, Italy
T (+39) 039 9162656 **F** (+39) 039 9162675 **W** pavonesistemi.com
Industrial Electronic Weighing Systems since 1963