Off Center load cell **PSZTL**

General information

PWS16320261123

The off center load cell PSZTL, built in aluminum, is robust and precise and is ideal for large single-cell platforms. Its weight capacity can reach up to 2000 kg. The PSZTL single point load cell ensures precise weighing in all circumstances, even where the load is not positioned exactly in the center. The off-center cell is particularly used in the food packaging sector and for the construction of single-cell scales. The off center load cell PSZTL has a 6 meter long shielded cable with 6 wires.

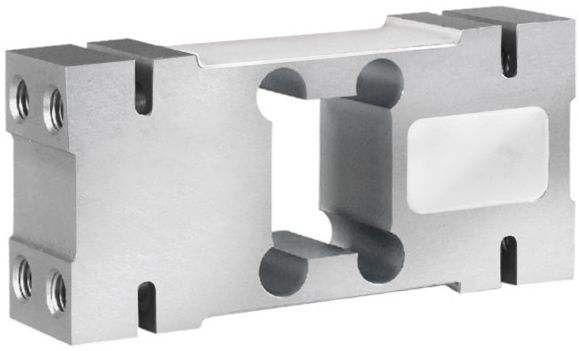

Suggested related products

A highly performing weighing system must be accurate, perfectly calibrated and well maintained. In order to improve the load cell performance and to optimize its functioning, you may need the following products:

Weight Transmitter UWT 6008

Weight Transmitter DAT 1400

Weight Indicator MCT 1302

Tester 1008 TESTER 1008

Junction Box CGS4-C

All indicated data may be changed without notice.
All the measures indicated are expressed in millimeters (mm).

PAVONE SISTEMI S.R.L.
Via Tiberio Bianchi 11/13/15, 20863 Concorezzo (MB), Milan, Italy
T (+39) 039 9162656 **F** (+39) 039 9162675 **W** pavonesistemi.com
Industrial Electronic Weighing Systems since 1963

Technical specifications

PWS16320261123

Rated load (RL):	1000, 2000 Kg
Repeatability:	±0.01 % RO
Input sensitivity:	2 mV/V ±10 %
Creep (20 minutes):	±0.02 % RO
Ultimate overload:	150 % RL
Deflection:	0.8 mm
Compensated Temperature:	-10 ÷ + 40 °C
Temperature range:	- 35 ÷ + 65°C
Temperature effect on zero balance:	0.0017 % °C
Zero balance:	±1 %
Insulation resistance:	> 5000 MOhm
Input resistance:	406 Ohm ±6
Output resistance:	350 Ohm ±3
Maximum supply voltage:	18 Volt
Breaking load:	> 300 %
Temperature effect on full scale:	0.0014% °C

All indicated data may be changed without notice.
All the measures indicated are expressed in millimeters (mm).

Outline Dimensions in mm

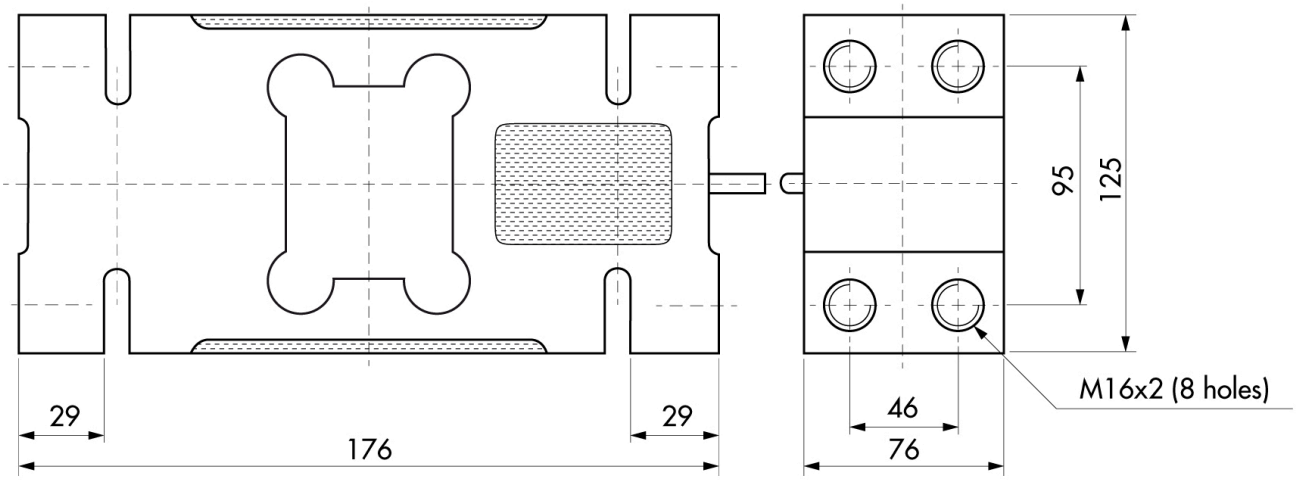

Max Platform dimensions 1200 x 1200

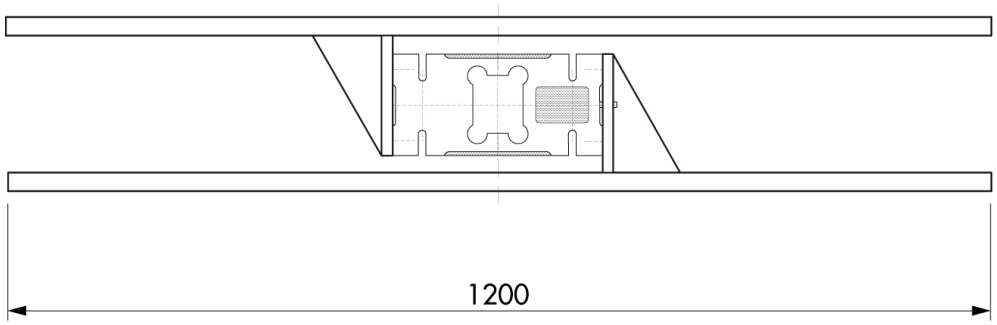

Electrical Connection	
+ Excitation	Red
- Excitation	Yellow
+ Sense	Brown
- Sense	Black
+ Signal	Blue
- Signal	White
Shield	Shield

The center of loading plate and also the center of the load cell should be the same position

All indicated data may be changed without notice.
All the measures indicated are expressed in millimeters (mm).