Off Center load cell **PSUP12**

available with certification • ATEX

General information

PWS27620261123

The off center load cell PSUP12, built in aluminum, has an excellent quality / price ratio and is ideal for any type of platform, especially for large single-cell platforms. The PSUP12 single point cell maintains precision in any position the object is loaded and this solves the problems that usually occur in weighing systems if the object does not rest exactly on the center of the cell. The cell can be customized on request.



All indicated data may be changed without notice.
All the measures indicated are expressed in millimeters (mm).

PAVONE SISTEMI S.R.L.
Via Tiberio Bianchi 11/13/15, 20863 Concorezzo (MB), Milan, Italy
T (+39) 039 9162656 **F** (+39) 039 9162675 **W** pavonesistemi.com
Industrial Electronic Weighing Systems since 1963

Off Center load cell **PSUP12**

available with certification • ATEX

Technical specifications

PWS27620261123

Rated load (RL):	5, 7, 10, 15, 30, 50, 90 Kg
Repeatability:	±0,02 % RL
Creep (30 minutes):	±0,03 % RL
Full scale non-Linearity:	±0,02 % RL
Ultimate overload:	150 % RL
Minimum Load:	0 % RL
Deflection:	< 1 mm
Temperature range:	-20 ÷ +60°C
Storage temperature:	-20 ÷ +60 °C
Temperature effect on zero balance:	±0,025 % RO/°C
Temperature effect on output:	±0,025 % RO/°C
Rated output RO:	2 mV/V
Insulation resistance:	> 2000 MW
Input resistance:	410 ±15 % Ohm
Output resistance:	350 ±3 Ohm
Power supply:	10 V
Maximum supply voltage:	15 V
Cable Lenght:	3 m
Hysteresis:	±0,02 % RL
Breaking load:	200 % RL
Zero tollerance:	±2 % RO
Output tolerance:	±10 % RL
Transverse load:	100 % RL
Thermal Gradient:	< 5 K/h

All indicated data may be changed without notice.
All the measures indicated are expressed in millimeters (mm).

PAVONE SISTEMI S.R.L.
Via Tiberio Bianchi 11/13/15, 20863 Concorezzo (MB), Milan, Italy
T (+39) 039 9162656 **F** (+39) 039 9162675 **W** pavonesistemi.com
Industrial Electronic Weighing Systems since 1963

Off Center load cell **PSUP12**

available with certification • ATEX

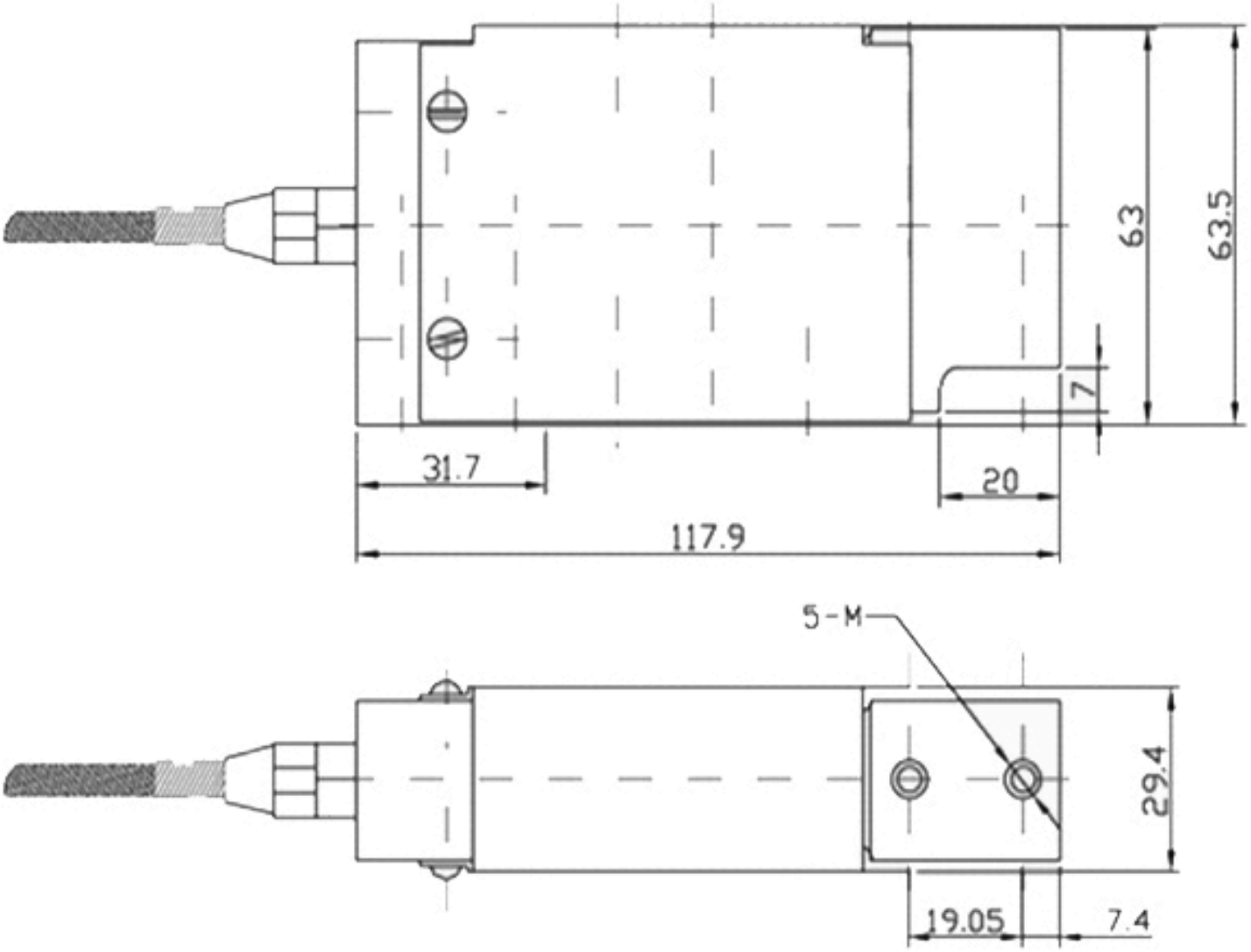

All indicated data may be changed without notice.
All the measures indicated are expressed in millimeters (mm).

PAVONE SISTEMI S.R.L.
Via Tiberio Bianchi 11/13/15, 20863 Concorezzo (MB), Milan, Italy
T (+39) 039 9162656 **F** (+39) 039 9162675 **W** pavonesistemi.com
Industrial Electronic Weighing Systems since 1963