Off Center load cell **PS62**

General information

PWS18620261123

The off center load cell PS62 is ideal for single cell platforms of big dimensions (up to 600 x 600 mm) and it has stainless stell box, a protection against humidity and a viscous damping, which is ideal for dynamic weighing and it allows faster setting times, faster weighing and an increase of the load cell average life. The PS62 single point load cell maintains precision in any position the object is loaded by solving the problems that usually arise in weighing systems if the object does not rest exactly on the center of the cell.

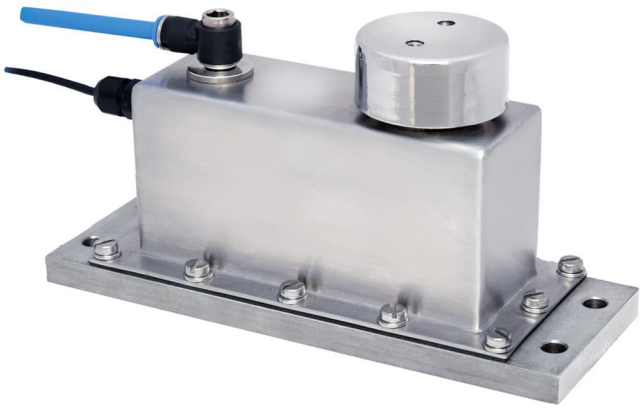

All indicated data may be changed without notice.
All the measures indicated are expressed in millimeters (mm).

PAVONE SISTEMI S.R.L.
Via Tiberio Bianchi 11/13/15, 20863 Concorezzo (MB), Milan, Italy
T (+39) 039 9162656 **F** (+39) 039 9162675 **W** pavonesistemi.com
Industrial Electronic Weighing Systems since 1963

Technical specifications

PWS18620261123

Rated load (RL):	5, 7.5, 10, 15, 20, 35, 50, 75, 120, 200 Kg
Combined error:	< ±0.017 % RO
Creep (30 minutes):	±0.016 % RO
Deflection:	0.2 - 0.4 mm
Compensated Temperature:	-10 ÷ + 40 °C
Temperature range:	-20 ÷ +70 °C
Temperature effect on zero balance:	< ±0.01 % RO/5°K
Rated output RO:	2.0 ±0.2 mV/V
Insulation resistance:	> 5000 MOhm
Power supply:	10 V
Impedance:	400 ÷ 20 Ohm
Maximum excitation:	15 V
Output impedance:	350 ±3 Ohm

All indicated data may be changed without notice.
All the measures indicated are expressed in millimeters (mm).

DIMENSIONS LOAD CELL MODEL 260 5÷35 KG CAPACITY

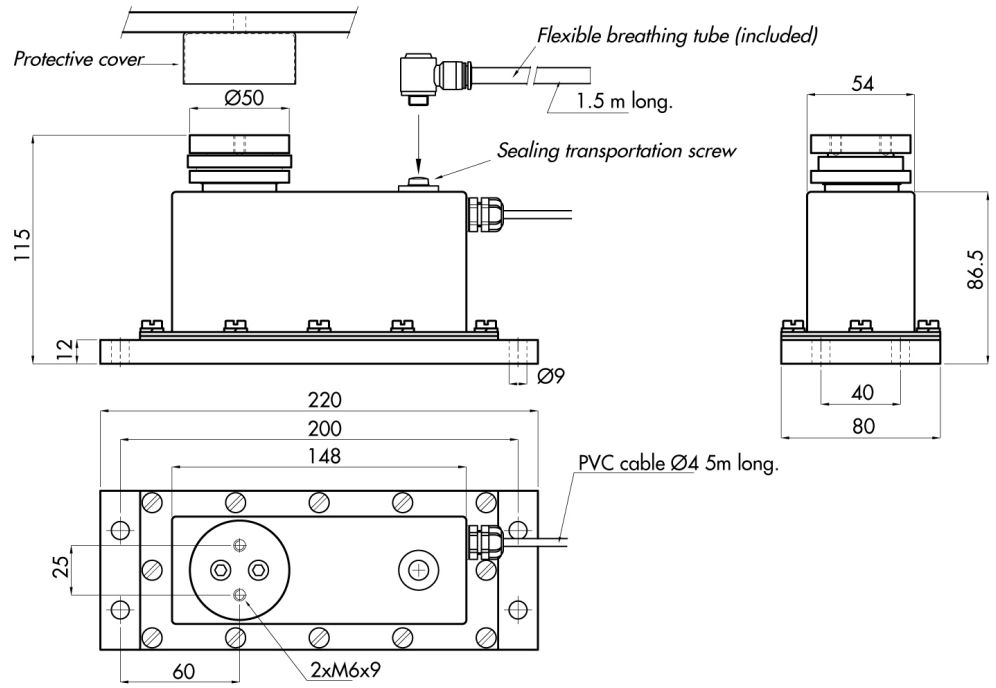

DIMENSIONS LOAD CELL MODEL 260 50÷200 KG CAPACITY

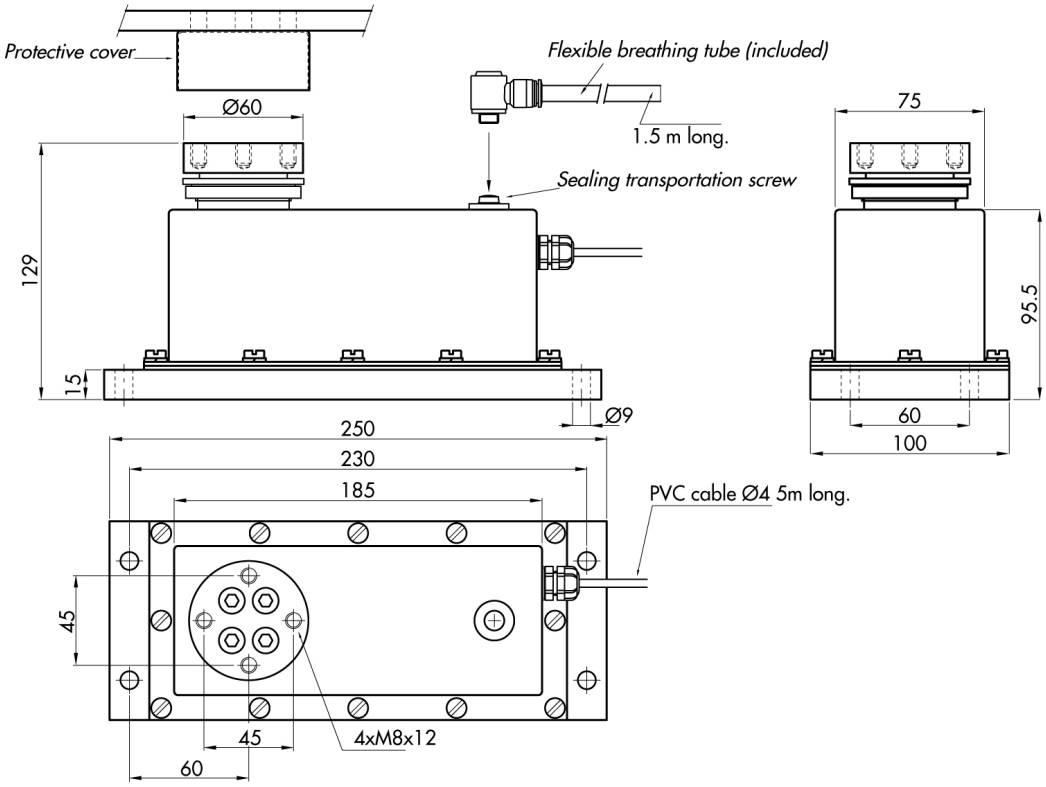

All indicated data may be changed without notice.
All the measures indicated are expressed in millimeters (mm).

DIMENSIONS LOAD CELL MODEL 260 50÷200 KG CAPACITY

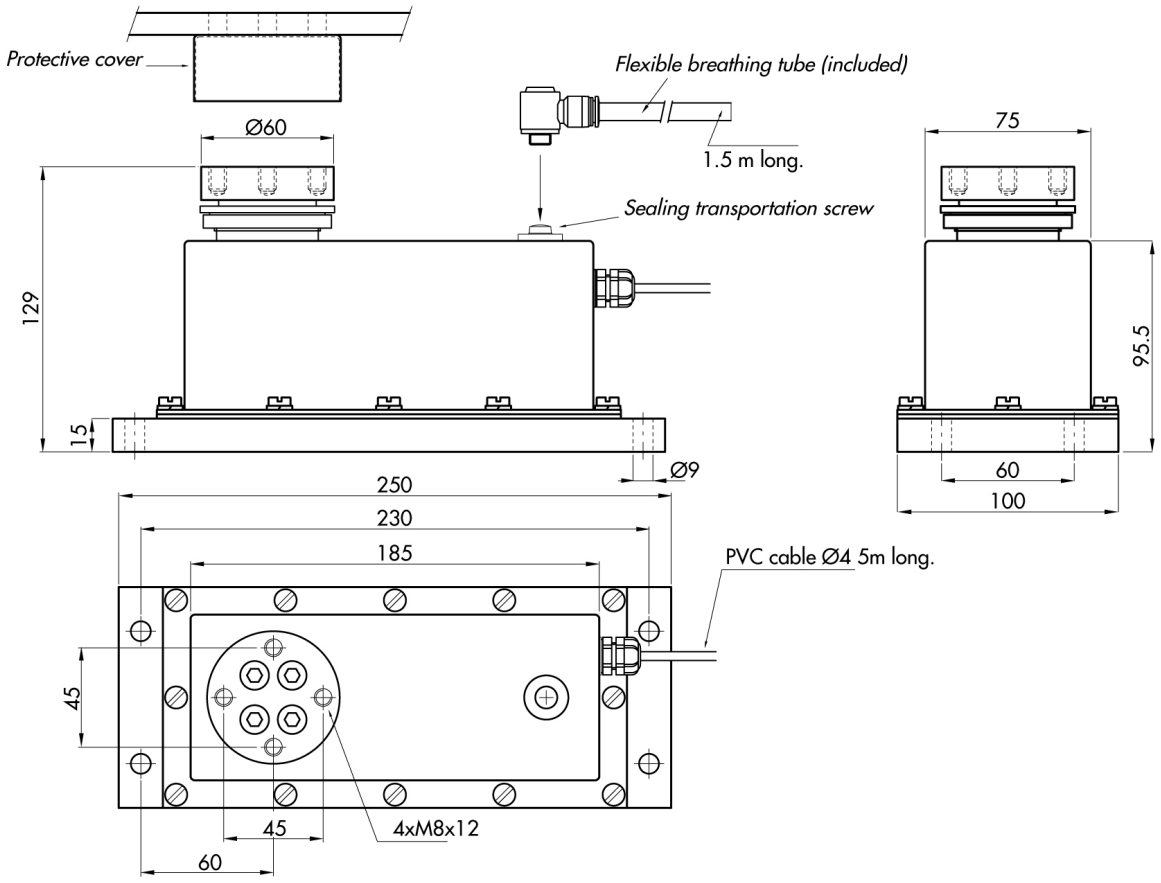

All indicated data may be changed without notice.
All the measures indicated are expressed in millimeters (mm).