Off Center load cell **PS19**

available with certification • ATEX • OIML

General information

PWS3920261123

The off center load cell PS19 is made of stainless steel and has been designed for the construction of scales for electromedical equipment and for dosing systems. The single point cell PS19 can be customized: the load capacity can vary from 250 kg to 400 kg and the dimensions of the plate can vary from 600 x 600 mm to 800 x 800 mm for cells with a high load capacity.



Suggested related products

A highly performing weighing system must be accurate, perfectly calibrated and well maintained. In order to improve the load cell performance and to optimize its functioning, you may need the following products:

Weight Transmitter UWT 6008

Weight Transmitter DAT 1400

Weight Indicator MCT 1302

Tester 1008 TESTER 1008

Off Center load cell CB14

Junction Box CGS4-C

All indicated data may be changed without notice.
All the measures indicated are expressed in millimeters (mm).

PAVONE SISTEMI S.R.L.
Via Tiberio Bianchi 11/13/15, 20863 Concorezzo (MB), Milan, Italy
T (+39) 039 9162656 **F** (+39) 039 9162675 **W** pavonesistemi.com
Industrial Electronic Weighing Systems since 1963

Technical specifications

PWS3920261123

Rated load (RL):	15, 20, 30, 50, 75, 120, 200, 250, 350, 400 Kg
Combined error:	< ±0.017 % RO
Repeatability:	< ±0.010 % RO
Creep (30 minutes):	±0.016 % RO
Safe overload:	150 % RL
Ultimate overload:	200 % RL
Material:	Stainless steel
Degree of protection:	IP68
Accuracy class:	3000 OIML
Deflection:	0.3 ÷ 0.5 mm
Compensated Temperature:	-10 ÷ +40 °C
Temperature range:	-20 ÷ +70 °C
Temperature effect on zero balance:	< ±0.01 % RO/5°K
Temperature effect on output:	< ±0.006 % on output/5°K
Rated output RO:	2.0 ±0.2 mV/V
Zero balance:	< ±2 % RO
Insulation resistance:	> 5000 MOhm
Input resistance:	400 ±20 Ohm
Output resistance:	350 ±3 Ohm
Recommended input:	5 ÷ 15 Vcc/ca

All indicated data may be changed without notice.
All the measures indicated are expressed in millimeters (mm).

Off Center load cell **PS19**

available with certification • ATEX • OIML

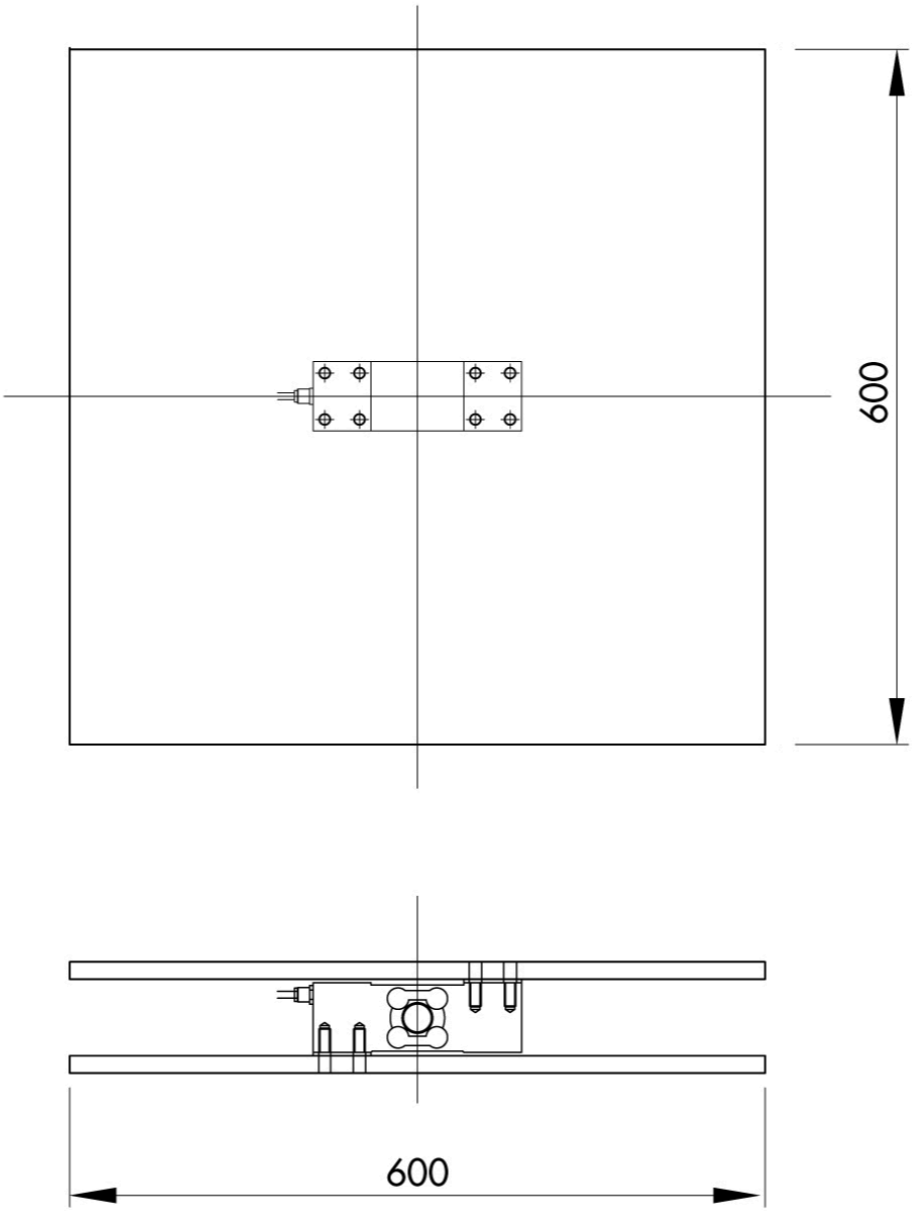

Electrical Connection	
+Excitation	Green
-Excitation	Black
+Signal	Red
-Signal	White
+Sense	Blue
-Sense	Yellow
Shield	Cable Shield

All indicated data may be changed without notice.
All the measures indicated are expressed in millimeters (mm).

PAVONE SISTEMI S.R.L.
Via Tiberio Bianchi 11/13/15, 20863 Concorezzo (MB), Milan, Italy
T (+39) 039 9162656 **F** (+39) 039 9162675 **W** pavonesistemi.com
Industrial Electronic Weighing Systems since 1963

Off Center load cell **PS19**

available with certification • ATEX • OIML

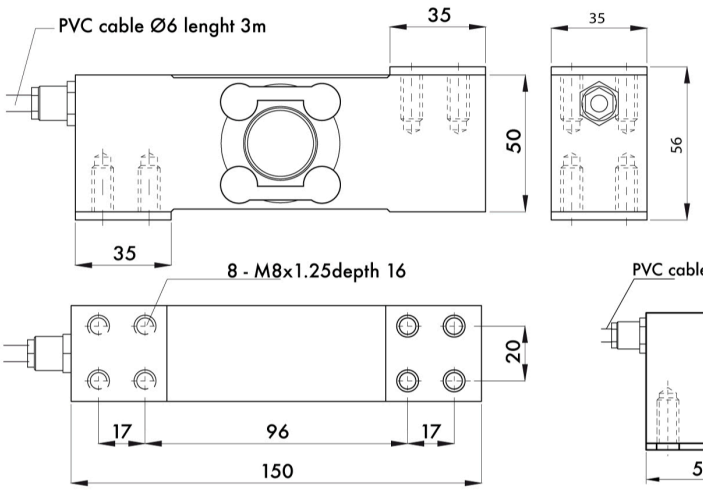

Capacity 15 ÷ 350 Kg

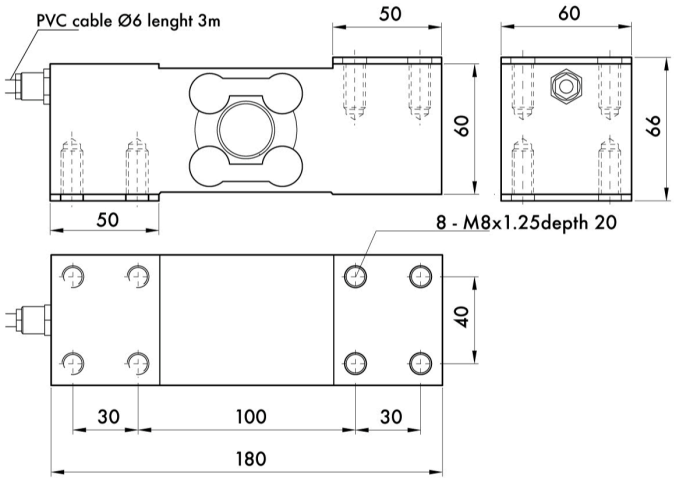

Capacity 250 ÷ 400 Kg

All indicated data may be changed without notice.
All the measures indicated are expressed in millimeters (mm).

PAVONE SISTEMI S.R.L.
Via Tiberio Bianchi 11/13/15, 20863 Concorezzo (MB), Milan, Italy
T (+39) 039 9162656 **F** (+39) 039 9162675 **W** pavonesistemi.com
Industrial Electronic Weighing Systems since 1963