Off Center load cell **1320**

available with certification • ATEX • OIML • NTEP • FM

General information

PWS18220261127

The off center load cell 1320, made of aluminum, is ideal for large-scale single-cell platforms, dynamometers and weight controllers. This load cell maintains precision in any position the object is loaded and this solves the problems that usually occur in weighing systems if the object does not rest exactly on the center of the cell. The off-center load cell 1320 has optional functions and can be customized according to customer needs. It has a 5-meter shielded 4-conductor cable.

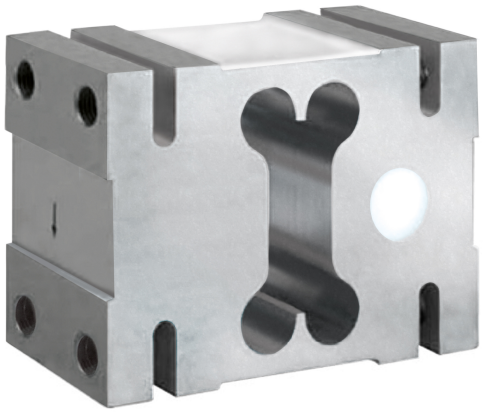

Suggested related products

A highly performing weighing system must be accurate, perfectly calibrated and well maintained. In order to improve the load cell performance and to optimize its functioning, you may need the following products:

Off Center load cell C2G1

Off Center load cell CB004

Off Center load cell CB14

Off Center load cell U2D1

All indicated data may be changed without notice.
All the measures indicated are expressed in millimeters (mm).

PAVONE SISTEMI S.R.L.
Via Tiberio Bianchi 11/13/15, 20863 Concorezzo (MB), Milan, Italy
T (+39) 039 9162656 **F** (+39) 039 9162675 **W** pavonesistemi.com
Industrial Electronic Weighing Systems since 1963

Off Center load cell **1320**

available with certification • ATEX • OIML • NTEP • FM

Technical specifications

PWS18220261127

Rated Load (RL):	1, 1.5, 2 t
Combined error:	±0.02 % RL
Repeatability:	±0.015 % RO
Creep (30 minutes):	±0.0170 % of applied load
Ultimate overload:	150 % RL
Visible resolution (in divisions):	3000
Compensated Temperature:	-10 ÷ + 40 °C
Temperature range:	-30 ÷ +70 °C
Temperature effect on zero balance:	±0.0023 % RO/°C
Temperature effect on output:	±0.0010 % of applied load/°C
Rated output RO:	±0.2 mV/V
Zero balance:	±0.2 mV/V
Insulation resistance:	>2000 MOhm
Cable Lenght:	5 m
Impedance:	415 ÷ 15 Ohm
Maximum excitation:	15 Vdc/ac RMS
Excitation recommended:	10 Vdc/ac RMS
Output impedance:	350 ±3 Ohm
Ultimate central overload:	300 % RL
Rated output tolerance:	±0.2 mV/V

All indicated data may be changed without notice.
All the measures indicated are expressed in millimeters (mm).

PAVONE SISTEMI S.R.L.
Via Tiberio Bianchi 11/13/15, 20863 Concorezzo (MB), Milan, Italy
T (+39) 039 9162656 **F** (+39) 039 9162675 **W** pavonesistemi.com
Industrial Electronic Weighing Systems since 1963

Off Center load cell **1320**

available with certification • ATEX • OIML • NTEP • FM

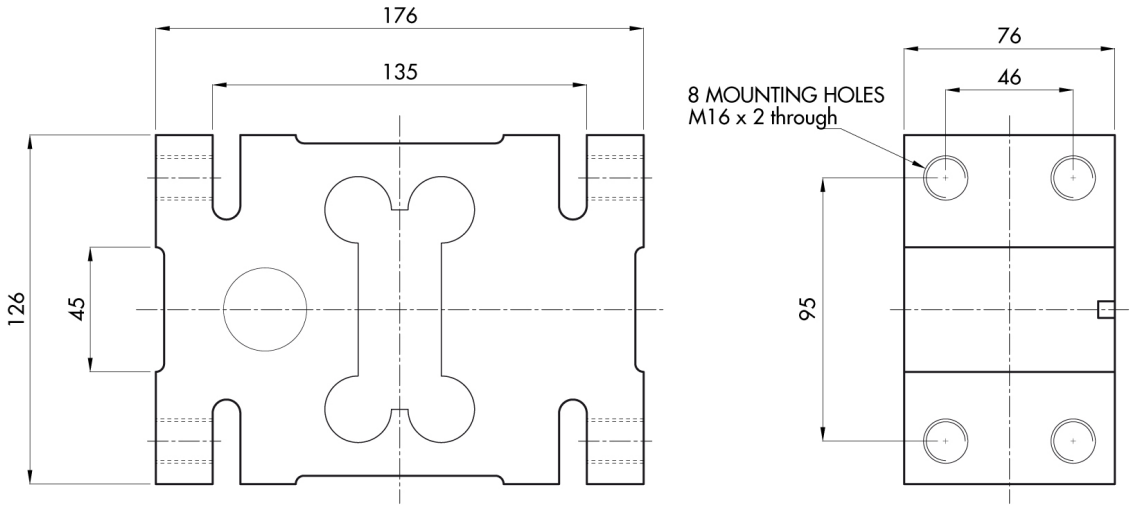

All indicated data may be changed without notice.
All the measures indicated are expressed in millimeters (mm).

PAVONE SISTEMI S.R.L.
Via Tiberio Bianchi 11/13/15, 20863 Concorezzo (MB), Milan, Italy
T (+39) 039 9162656 **F** (+39) 039 9162675 **W** pavonesistemi.com
Industrial Electronic Weighing Systems since 1963