Off Center load cell **Tedea 1260**

available with certification • ATEX • OIML • NTEP • FM

General information

PWS17720261123

The off center load cell 1260, made of aluminum, is robust and precise and ideal for large-scale single-cell platforms. This load cell maintains precision in any position the object is loaded and this solves the problems that usually occur in weighing systems if the object does not rest exactly on the center of the cell. The off center load cell 1260 has a 6 meter long shielded cable with 6 wires.

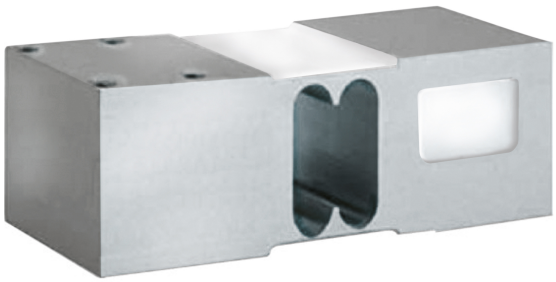

Suggested related products

A highly performing weighing system must be accurate, perfectly calibrated and well maintained. In order to improve the load cell performance and to optimize its functioning, you may need the following products:

Off Center load cell C2G1

Off Center load cell CB004

Off Center load cell CB14

Off Center load cell U2D1

All indicated data may be changed without notice.
All the measures indicated are expressed in millimeters (mm).

PAVONE SISTEMI S.R.L.
Via Tiberio Bianchi 11/13/15, 20863 Concorezzo (MB), Milan, Italy
T (+39) 039 9162656 **F** (+39) 039 9162675 **W** pavonesistemi.com
Industrial Electronic Weighing Systems since 1963

Technical specifications

PWS17720261123

Rated load (RL):	50, 75, 100, 150, 250, 300, 500, 635 Kg
Combined error:	±0.02 % RO
Repeatability:	±0.015 % RO
Creep (30 minutes):	±0.0170 % of applied load
Safe overload:	150 % RL
Ultimate overload:	300 % RL
Degree of protection:	IP66
Compensated Temperature:	-10 ÷ + 40 °C
Temperature range:	-20°C ÷ +70°C
Temperature effect on zero balance:	±0.0023 % RO/°C
Temperature effect on output:	±0.0010 % of applied load/°C
Rated output RO:	2.0 mV/V
Zero balance:	±0.2 mV/V
Insulation resistance:	>2000 MOhm
Input resistance:	415 ±15 Ohm
Cable Lenght:	3m
Maximum platform size (mm):	600 x 600
Maximum excitation:	15 Vdc/ac RMS
Excitation recommended:	10 Vdc/ac RMS
Output impedance:	350 ±3 Ohm

All indicated data may be changed without notice.
All the measures indicated are expressed in millimeters (mm).

PAVONE SISTEMI S.R.L.
Via Tiberio Bianchi 11/13/15, 20863 Concorezzo (MB), Milan, Italy
T (+39) 039 9162656 **F** (+39) 039 9162675 **W** pavonesistemi.com
Industrial Electronic Weighing Systems since 1963

Off Center load cell **Tedea 1260**

available with certification • ATEX • OIML • NTEP • FM

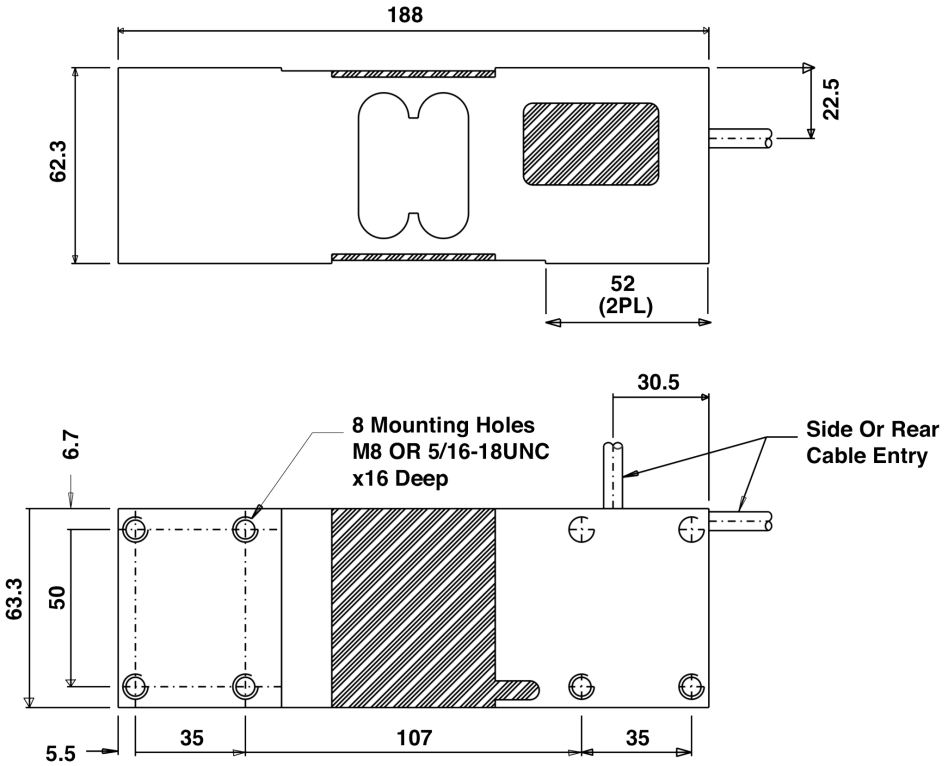

Wiring Schematic Diagram	
BALANCED TEMPERATURE COMPENSATION	
+VE INPUT	Green
+VE SENSE	Blue
+VE OUTPUT	Red
-INPUT	Black
-VE SENSE	Brown
-OUTPUT	White

All indicated data may be changed without notice.
All the measures indicated are expressed in millimeters (mm).

PAVONE SISTEMI S.R.L.
Via Tiberio Bianchi 11/13/15, 20863 Concorezzo (MB), Milan, Italy
T (+39) 039 9162656 **F** (+39) 039 9162675 **W** pavonesistemi.com
Industrial Electronic Weighing Systems since 1963