General information

PWS35220261127

MKC is a mounting accessory invented by Pavone Weighing Systems, who developed this product thanks to his previous experience and know-how. This is an innovative mechanical system for mounting load cells for industrial weighing systems. The kit can be easily adjusted for both radial and tangential assembly. MKC does not hinder the normal expansion and contraction movements of the weighing structure and it allows the weighing structure to be lifted by itself without the aid of a jack. Furthermore, it is excellent as a template for the assembly mechanics of a weighing system. The MKC accessory stands out from the others because: it is possible to adjust it in height and this allows to reach the perfect flatness, the lower base and the upper base are connected and fixed and this ensures correct installation and perfect perpendicularity, it also works as anti-tilting and finally, it is able to absorb the lateral forces thanks to the ball cup attached to the base of the cell on which the load is unloaded. The mounting kit MKC is available in alloy steel or in stainless steel AISI 304 and can be used with our load cells: GD4, CVS and CVF with capacity 10000÷30000 kg.

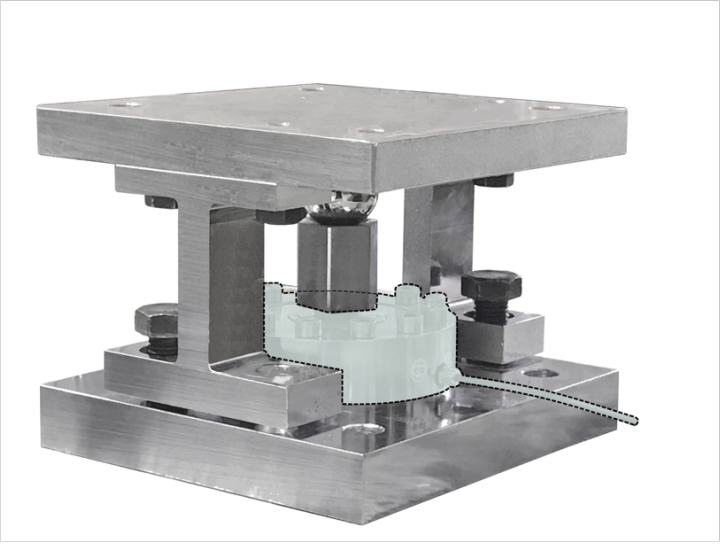

Suggested related products

A highly performing weighing system must be accurate, perfectly calibrated and well maintained. In order to improve the load cell performance and to optimize its functioning, you may need the following products:

Weight Transmitter DAT 1400

Weight Indicator MCT 1302

Double Shear Beam Load Cell DDR

All indicated data may be changed without notice.
All the measures indicated are expressed in millimeters (mm).

PAVONE SISTEMI S.R.L.
Via Tiberio Bianchi 11/13/15, 20863 Concorezzo (MB), Milan, Italy
T (+39) 039 9162656 **F** (+39) 039 9162675 **W** pavonesistemi.com
Industrial Electronic Weighing Systems since 1963

Mounting kits **MKC**

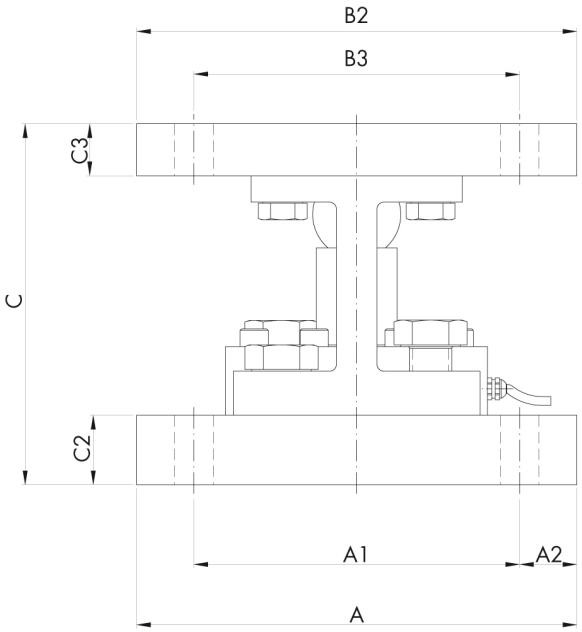

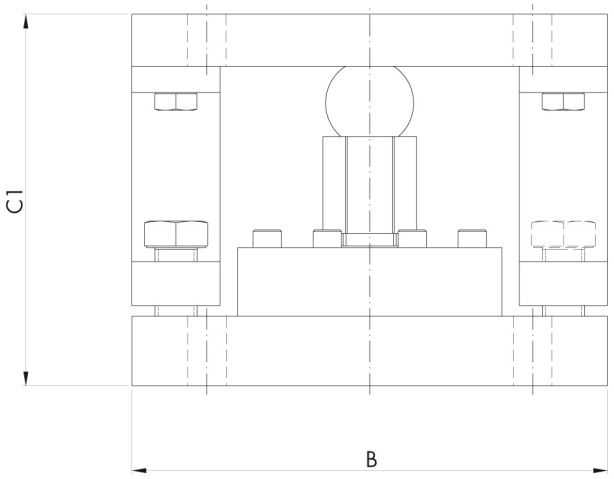

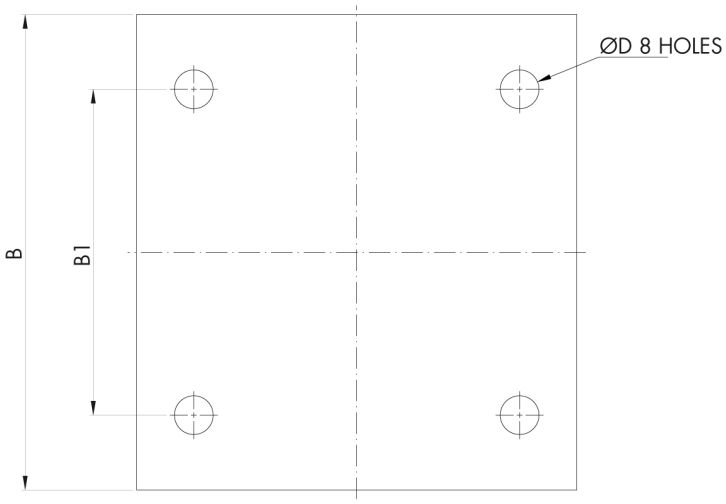

ALLOY STEEL (capacity, dimensions and maximun load values by model)

KIT	KG	A	A1	A2	B	B1	B2	B3	C	C1	C2	C3	ØD	COMPRESSION	TILT	SIDE LOAD
MKC	10.000÷30.000	250	185	32,5	270	185	250	185	205	211	39,5	29,5	22	55100 kg	37600 kg	19100 kg

STAINLESS STEEL (capacity, dimensions and maximun load values by model)

KIT	KG	A	A1	A2	B	B1	B2	B3	C	C1	C2	C3	ØD	COMPRESSION	TILT	SIDE LOAD
MKC	10.000÷30.000	250	185	32,5	270	185	250	185	205	211	39,5	29,5	22	49200 kg	32900 kg	17100 kg

All indicated data may be changed without notice.
All the measures indicated are expressed in millimeters (mm).

PAVONE SISTEMI S.R.L.
Via Tiberio Bianchi 11/13/15, 20863 Concorezzo (MB), Milan, Italy
T (+39) 039 9162656 **F** (+39) 039 9162675 **W** pavonesistemi.com
Industrial Electronic Weighing Systems since 1963