High Temperature load cell **SB HT**

General information

PWS12720261127

The SB HT load cell is ideal for high temperatures and it is designed for weighing hoppers and tanks and for the construction of low-profile platforms. When used with its mounting accessories, it avoids the use of mechanical constraints. The SB HT cell has excellent characteristics of linearity, precision and resistance, even at lateral loads of over 50%. The SB HT cell is made of stainless steel and has a watertight protection for use in severe environmental conditions.



All indicated data may be changed without notice.
All the measures indicated are expressed in millimeters (mm).

PAVONE SISTEMI S.R.L.
Via Tiberio Bianchi 11/13/15, 20863 Concorezzo (MB), Milan, Italy
T (+39) 039 9162656 **F** (+39) 039 9162675 **W** pavonesistemi.com
Industrial Electronic Weighing Systems since 1963

Technical specifications

PWS12720261127

Rated load (RL):	75, 125, 150, 250 Kg
Combined error:	±0.025 % RO
Repeatability:	±0.01 % RO
Creep (20 minutes):	±0.03 % RO
Safe overload:	150 % RL
Ultimate overload:	> 300 % RL
Material:	Stainless steel AISI 17-4PH
Degree of protection:	IP65
Deflection:	< 0.5 mm
Compensated Temperature:	-10 ÷ +120 °C
Temperature range:	-20 ÷ +150 °C
Temperature effect on zero balance:	0.015 % RO/10°C
Temperature effect on output:	0.025 % on output/10°C
Rated output RO:	3 mV/V ±0.25 %
Zero balance:	±1 % RO
Insulation resistance:	> 2000 MOhm
Input resistance:	385 ±3 Ohm
Output resistance:	350 ±3 Ohm
Recommended input:	5 ÷ 12 Vdc/ac

All indicated data may be changed without notice.
All the measures indicated are expressed in millimeters (mm).

PAVONE SISTEMI S.R.L.
Via Tiberio Bianchi 11/13/15, 20863 Concorezzo (MB), Milan, Italy
T (+39) 039 9162656 **F** (+39) 039 9162675 **W** pavonesistemi.com
Industrial Electronic Weighing Systems since 1963

High Temperature load cell **SB HT**

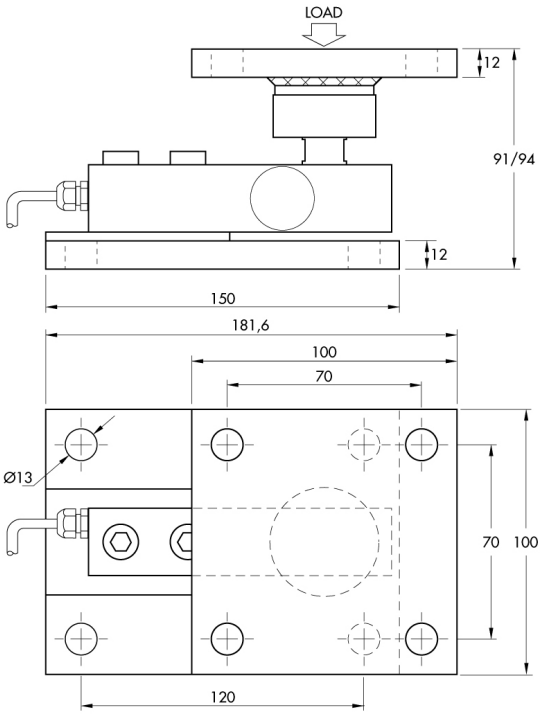

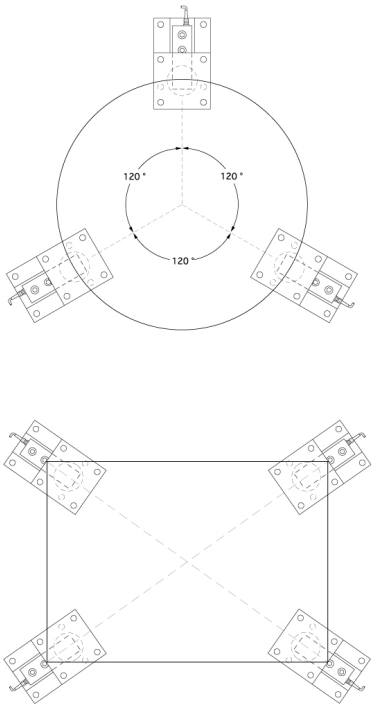

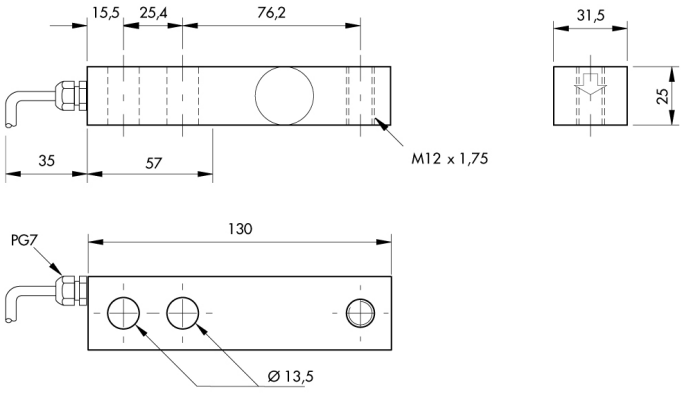

All indicated data may be changed without notice.
All the measures indicated are expressed in millimeters (mm).

PAVONE SISTEMI S.R.L.
Via Tiberio Bianchi 11/13/15, 20863 Concorezzo (MB), Milan, Italy
T (+39) 039 9162656 **F** (+39) 039 9162675 **W** pavonesistemi.com
Industrial Electronic Weighing Systems since 1963