High Temperature load cell **CMH HT**

General information

PWS13420261127

The CMH HT load cell, built in stainless steel, has been designed for the industrial weighing of silos, tanks, ladles etc. and it is ideal for working in harsh environments or where a high temperature is present. It has excellent characteristics of precision, strength and maximum resistance to impacts and overloads. It is mainly used in the food, chemical, pharmaceutical and steel industries. The cell can be customized according to customer needs.



Suggested related products

A highly performing weighing system must be accurate, perfectly calibrated and well maintained. In order to improve the load cell performance and to optimize its functioning, you may need the following products:

Weight Transmitter DAT 1400

Weight Indicator MCT 1302

High Temperature load cell C2G1 HT

High Temperature load cell PRR HT

High Temperature load cell PSPRX HT

High Temperature load cell SB HT

All indicated data may be changed without notice.
All the measures indicated are expressed in millimeters (mm).

PAVONE SISTEMI S.R.L.
Via Tiberio Bianchi 11/13/15, 20863 Concorezzo (MB), Milan, Italy
T (+39) 039 9162656 **F** (+39) 039 9162675 **W** pavonesistemi.com
Industrial Electronic Weighing Systems since 1963

Technical specifications

PWS13420261127

Rated Load (RL):	2, 6, 10, 15, 20, 30, 40, 50, 60, 100, 150, 200, 250 t
Combined error:	±0.1 % RL
Repeatability:	±0.05 % RL
Creep (20 minutes):	±0.03 % RL
Safe overload:	150 % RL
Ultimate overload:	> 300 % RL
Material:	Stainless steel AISI 17-4PH
Degree of protection:	IP65
Deflection:	0.3 mm
Compensated Temperature:	-10 ÷ +90 °C
Temperature range:	-35 ÷ +150 °C
Temperature effect on zero balance:	±0.005 % RL/°C
Temperature effect on output:	±0.005 % RL/°C
Rated output RO:	2 mV/V
Insulation resistance:	> 5000 MOhm
Input resistance:	350 ±20 Ohm
Output resistance:	350 ±5 Ohm
Recommended input:	5 ÷ 12 Vdc/ac

All indicated data may be changed without notice.
All the measures indicated are expressed in millimeters (mm).

PAVONE SISTEMI S.R.L.
Via Tiberio Bianchi 11/13/15, 20863 Concorezzo (MB), Milan, Italy
T (+39) 039 9162656 **F** (+39) 039 9162675 **W** pavonesistemi.com
Industrial Electronic Weighing Systems since 1963

High Temperature load cell **CMH HT**

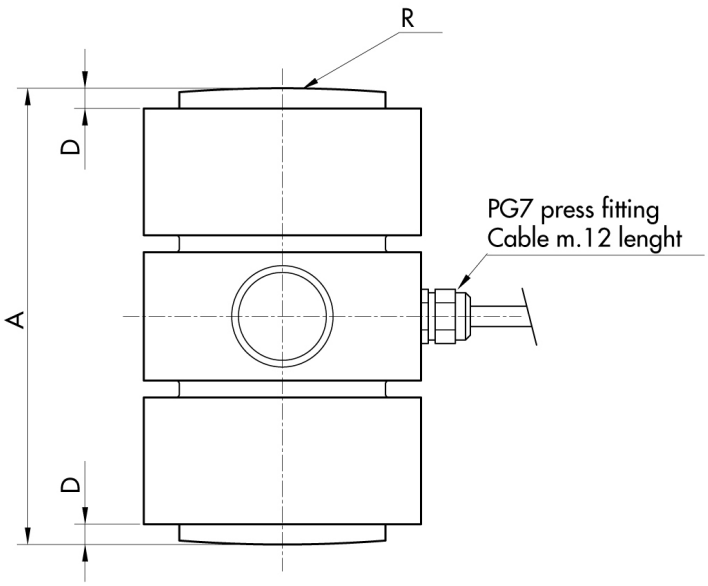

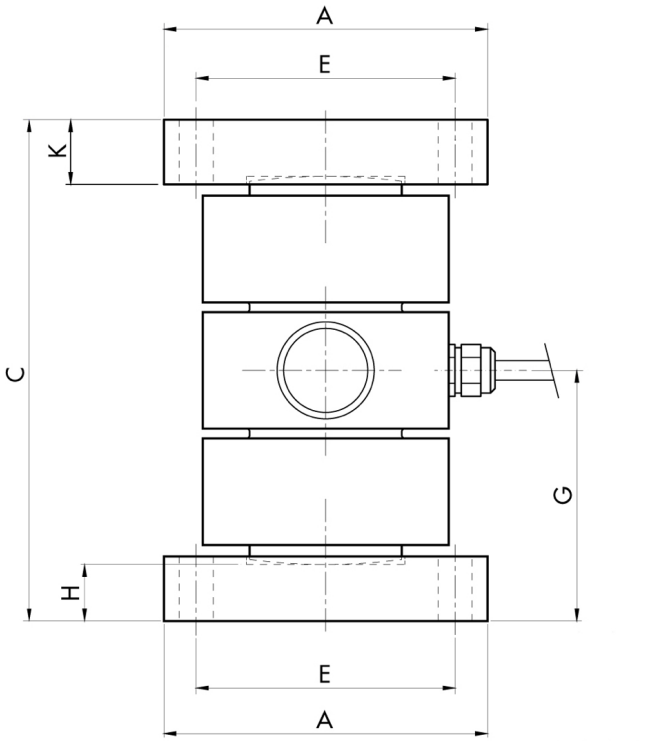

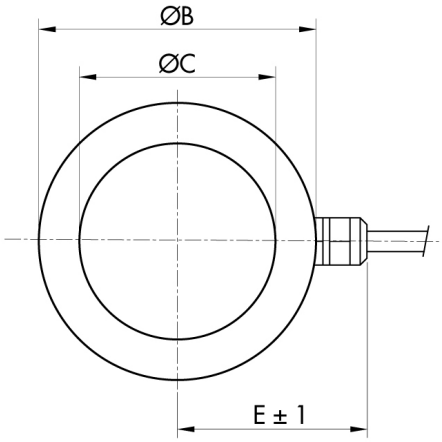

RANGE	A	ØB	ØC	D	E	R
2-10 t	104	52	30	6	42	180
20-30 t	105	52	30	8	42	200
40-60 t	120	76	47	8	53	180
100 t	135	82	58	8	56	400
150-200 t	160	125	87	8	77	400
250 t	200	140	100	10	86	450

RANGE	A	B	C	ØD	E	F	G	H	K
2-10 t	80	80	120	6.5	68	68	60	8	10
20-30 t	100	100	140	10.5	80	80	70	17.5	20
40-60 t	100	100	160	10.5	80	80	80	17.5	23
100 t	120	120	200	10.5	100	100	100	32.5	35
150-200 t	150	150	250	12.5	125	125	125	45	49
250 t	190	190	310	15	160	160	155	55	60

All indicated data may be changed without notice.
All the measures indicated are expressed in millimeters (mm).

PAVONE SISTEMI S.R.L.
Via Tiberio Bianchi 11/13/15, 20863 Concorezzo (MB), Milan, Italy
T (+39) 039 9162656 **F** (+39) 039 9162675 **W** pavonesistemi.com
Industrial Electronic Weighing Systems since 1963