Compression load cell **CC3**

available with certification • ATEX

General information

PWS220261127

The CC3 Compression Load Cell has been designed to meet the requirements of a wide range of industrial weighing applications, it has excellent accuracy and robustness thanks to the stainless steel construction, which guarantees maximum resistance to impacts and overloads. The CC3 load cell can be customized and the user can decide whether to include some options, such as high-temperature version and ATEX or EAC certified versions or not.



Suggested related products

A highly performing weighing system must be accurate, perfectly calibrated and well maintained. In order to improve the load cell performance and to optimize its functioning, you may need the following products:

Weight Transmitter UWT 6008

Weight Transmitter DAT 1400

Mounting kits DE MOUNTING KIT

Tester 1008 TESTER 1008

Junction Box CGS4-C

Double Shear Beam Load Cell DDR

All indicated data may be changed without notice.
All the measures indicated are expressed in millimeters (mm).

PAVONE SISTEMI S.R.L.
Via Tiberio Bianchi 11/13/15, 20863 Concorezzo (MB), Milan, Italy
T (+39) 039 9162656 **F** (+39) 039 9162675 **W** pavonesistemi.com
Industrial Electronic Weighing Systems since 1963

Technical specifications

PWS220261127

Rated Load (RL):	0.25 ÷ 10, 15, 20, 25, 35, 50, 100, 200 t
Combined error:	< ± 0.05 % RO
Repeatability:	< ±0.03 % RO
Creep (20 minutes):	±0,03 % RO
Safe overload:	150 % RL
Ultimate overload:	300 % RL
Material:	Stainless steel
Degree of protection:	IP68
Compensated Temperature:	-10 ÷ +40 °C
Temperature range:	-20 ÷ +70 °C
Temperature effect on zero balance:	0.003 % RL/°C
Temperature effect on output:	0.002 % output/°C
Rated output RO:	2 mV/V ±0.1 %
Zero balance:	< ± 1 % RO
Insulation resistance:	> 2000 MOhm
Input resistance:	700 ÷ 710 Ohm
Output resistance:	700 ÷ 705 Ohm
Recommended input:	5 ÷ 15 Vdc/Vac

All indicated data may be changed without notice.
All the measures indicated are expressed in millimeters (mm).

Compression load cell **CC3**

available with certification • ATEX

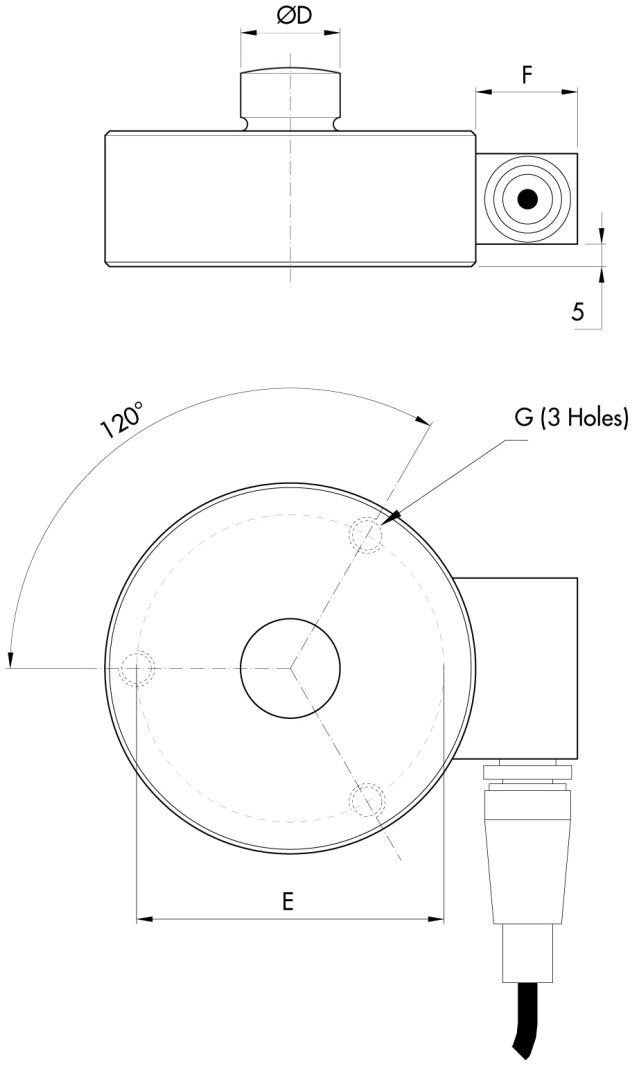

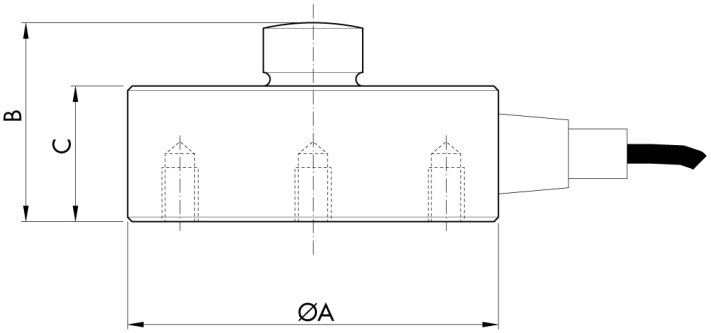

CAPACITY	ØA	B	C	ØD	ØE	F	G
0.1÷10t	82	44	32	22	70	22	M8x15
15÷25t	100	48	35	28	80	22	M10x15
35t	126	54	40	35	105	22	M12x20
50÷100t	160	85	60	60	130	25	M16x20

Electrical Connections	
+Excitation	Red
-Excitation	Black
+Signal	Green
-Signal	White
Shield	Cable Shield

All indicated data may be changed without notice.
All the measures indicated are expressed in millimeters (mm).

PAVONE SISTEMI S.R.L.
Via Tiberio Bianchi 11/13/15, 20863 Concorezzo (MB), Milan, Italy
T (+39) 039 9162656 **F** (+39) 039 9162675 **W** pavonesistemi.com
Industrial Electronic Weighing Systems since 1963

Compression load cell **CC3**

available with certification • ATEX

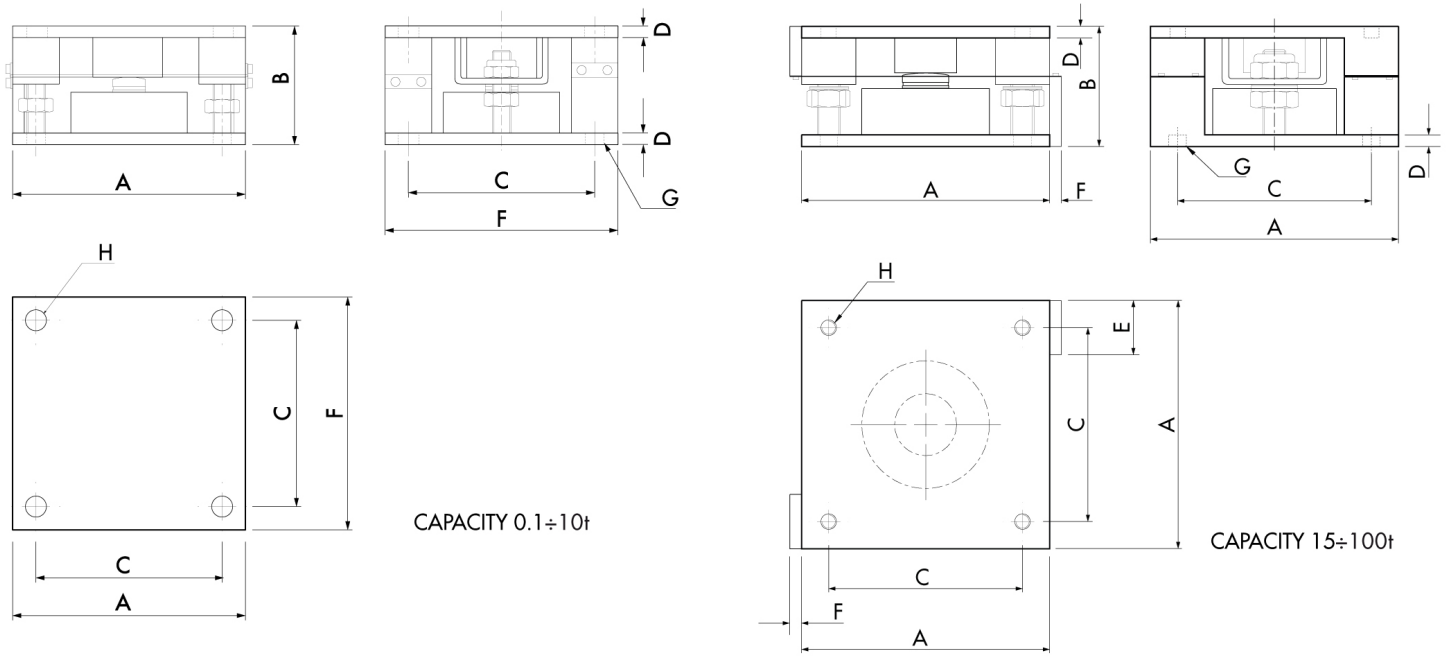

LOAD MODULE ORIENTATION

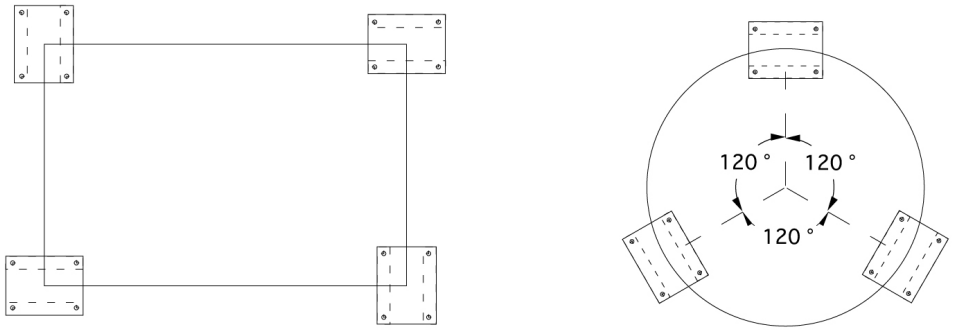

CAPACITY	A	B	C	D	E	F	G	H
0.1÷10t	175	95	115	10	-	150	14	M12
15÷25t	200	102	160	10	35	12	17	M12
35t	250	132	185	12.5	61	12	20	M18
50÷100t	320	155	250	15	70	15	23	M20

All indicated data may be changed without notice.
All the measures indicated are expressed in millimeters (mm).

PAVONE SISTEMI S.R.L.
Via Tiberio Bianchi 11/13/15, 20863 Concorezzo (MB), Milan, Italy
T (+39) 039 9162656 **F** (+39) 039 9162675 **W** pavonesistemi.com
Industrial Electronic Weighing Systems since 1963