BLH Nobel load cell **KISD-6**

available with certification • ATEX • IECEx • SIL

General information

PWS5120261123

The BLH NOBEL KISD-6 load cell is made of stainless steel, it has a cylindrical shape and it is easy to install. The KISD-6 cell is characterized by high accuracy and overload capacity. In addition, the KISD-6 load cell is ideal for cranes, large containers and conveyor belts. The KISD-6 cell also owns a shielded conduit cable of a length of 10 mt.



Suggested related products

A highly performing weighing system must be accurate, perfectly calibrated and well maintained. In order to improve the load cell performance and to optimize its functioning, you may need the following products:

Weight Transmitter UWT 6008

Weight Transmitter DAT 1400

Weight Indicator MCT 1302

Tester 1008 TESTER 1008

Junction Box CGS4-C

All indicated data may be changed without notice.
All the measures indicated are expressed in millimeters (mm).

PAVONE SISTEMI S.R.L.
Via Tiberio Bianchi 11/13/15, 20863 Concorezzo (MB), Milan, Italy
T (+39) 039 9162656 **F** (+39) 039 9162675 **W** pavonesistemi.com
Industrial Electronic Weighing Systems since 1963

Technical specifications

PWS5120261123

Rated load RL:	50, 100, 200, 400, 1000 kN
Combined error:	±0.1 % RO
Repeatability:	0.02 % RO
Safe overload:	100 % RL
Ultimate overload:	200 % RL
Safe sideload:	100 % RL
Ultimate sideload:	200 % RL
Material:	Stainless steel
Degree of protection:	IP67
Temperature range:	-40 ÷ +80 (+100 optional)°C
Temperature effect on zero balance:	±0.005 % RO/°C
Temperature effect on output:	±0.005 % of output/°C
Rated output RO:	±2 mV/V
Zero balance:	±5 % RO
Insulation resistance:	> 4 G Ohm
Input resistance:	382 ±3 Ohm
Output resistance:	350 ±3 Ohm
Recommended input:	10 Vdc/ac
Maximum supply voltage:	18 Vdc/ac
Tolerance of shunt calibration values:	±0.25 %

All indicated data may be changed without notice.
All the measures indicated are expressed in millimeters (mm).

PAVONE SISTEMI S.R.L.
Via Tiberio Bianchi 11/13/15, 20863 Concorezzo (MB), Milan, Italy
T (+39) 039 9162656 **F** (+39) 039 9162675 **W** pavonesistemi.com
Industrial Electronic Weighing Systems since 1963

BLH Nobel load cell **KISD-6**

available with certification • ATEX • IECEx • SIL

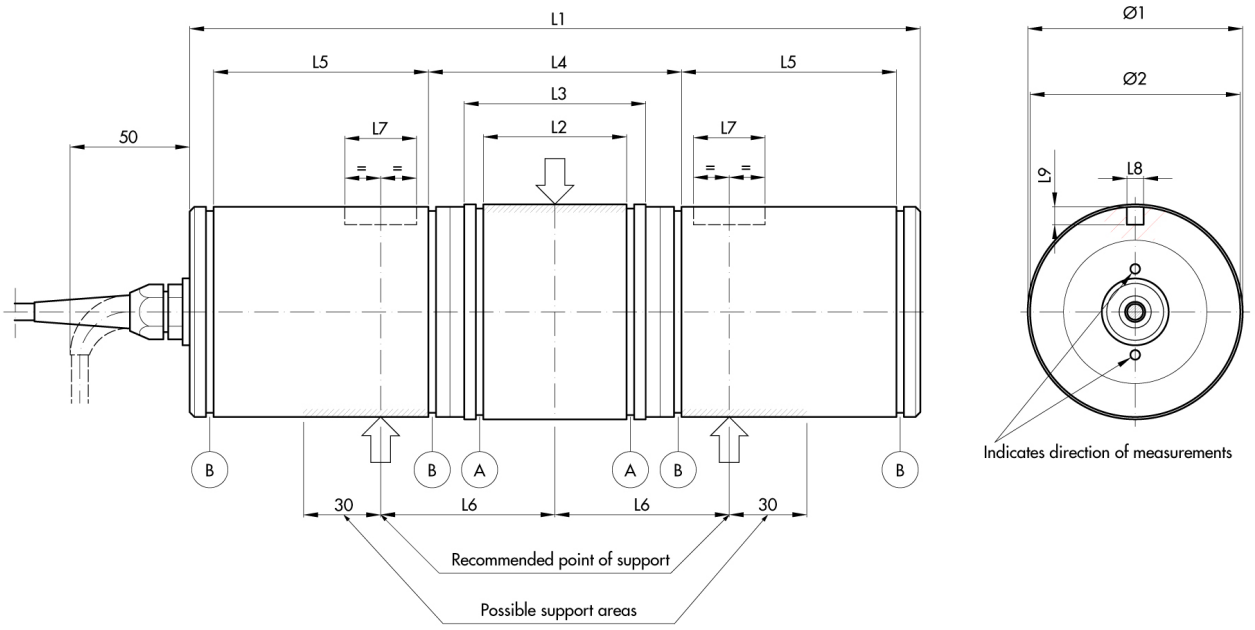

RANGE kN	L1	L2	L3	L4	L5	L6	L7	L8	L9	Ø1	Ø2	A CIRCLIP	B CIRCLIP
50, 100	260	49 (+0.5; +0.2)	62	90	75 (+0.5; +0.2)	59	20	7	6	70 (-0.030; -0.076)	68 (0; -0.120)	70 x 2.5	68 x 2.5
200	306	60 (+0.5; +0.3)	76	106	90 (+0.5; +0.3)	73	30	7	7.5	90 (-0.036; -0.090)	88 (0; -0.140)	90 x 3.0	88 x 3.0
400	360	70 (+0.5; +0.3)	86	116	112 (+0.5; +0.3)	83	35	8.5	8.5	100 (-0.036; -0.090)	99 (0; -0.140)	100 x 3.0	100 x 3.0
1000	500	150 (+0.5; +0.3)	180	222	124 (+0.5; +0.3)	145	35	15	10	140 (-0.043; -0.108)	139 (0; -0.160)	140 x 4.0	140 x 4.0

All indicated data may be changed without notice.
All the measures indicated are expressed in millimeters (mm).

PAVONE SISTEMI S.R.L.
Via Tiberio Bianchi 11/13/15, 20863 Concorezzo (MB), Milan, Italy
T (+39) 039 9162656 **F** (+39) 039 9162675 **W** pavonesistemi.com
Industrial Electronic Weighing Systems since 1963

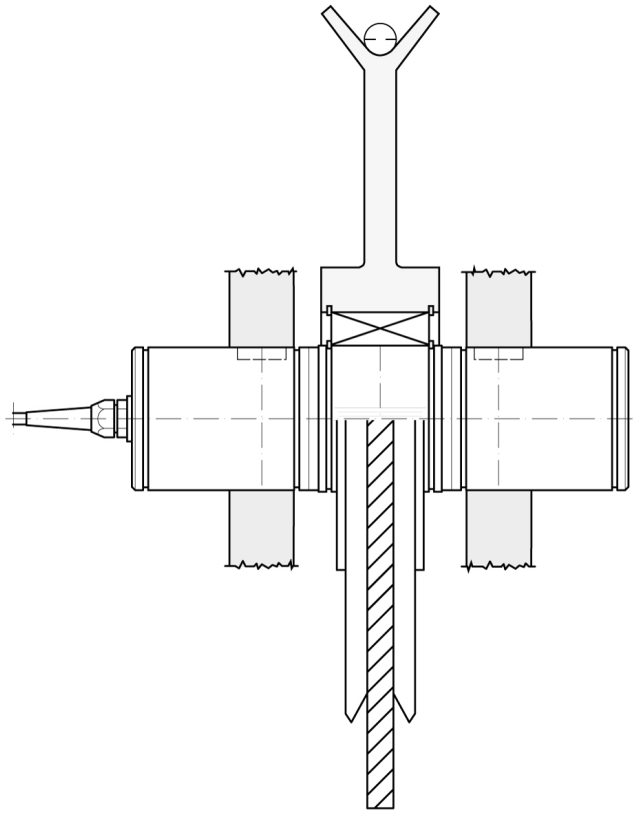

All indicated data may be changed without notice.
All the measures indicated are expressed in millimeters (mm).

PAVONE SISTEMI S.R.L.
Via Tiberio Bianchi 11/13/15, 20863 Concorezzo (MB), Milan, Italy
T (+39) 039 9162656 **F** (+39) 039 9162675 **W** pavonesistemi.com
Industrial Electronic Weighing Systems since 1963