BLH Nobel load cell **KIS-3**

available with certification • ATEX • OIML • NTEP • FM • IECEx

General information

PWS2120261125

The BLH NOBEL KIS 3 load cell is extremely precise and robust and it is resistant to very high lateral forces. The KIS 3 cell is easy to install and has a moveble loading point and 5 meter 4-wire shielded cables.The BHL NOBEL KIS 3 has a wide range of application: dosing, mixing and melting systems, complex weighing processes, reactors, weighing of high-value components and accurate force measurement systems.



Suggested related products

A highly performing weighing system must be accurate, perfectly calibrated and well maintained. In order to improve the load cell performance and to optimize its functioning, you may need the following products:

Weight Transmitter UWT 6008

Weight Transmitter DAT 1400

Weight Indicator MCT 1302

Tester 1008 TESTER 1008

Junction Box CGS4-C

All indicated data may be changed without notice.
All the measures indicated are expressed in millimeters (mm).

Technical specifications

PWS2120261125

Rated load RL:	1, 2, 5, 10, 20 kN
Combined error:	±0.02 % RO
Repeatability:	±0.01 % RO
Creep (30 minutes):	±0.01 % RL
Safe overload:	200 % RL
Ultimate overload:	300 % RL
Safe sideload:	100 % RL
Ultimate sideload:	200 % RL
Material:	Stainless steel
Degree of protection:	IP67
Temperature range:	-40 ÷ +105 °C on request
Temperature effect on output:	±0.001 % of output/°C
Rated output RO:	2.040 mV/V ±0.1 %
Zero balance:	±1 % RO
Insulation resistance:	> 4 G Ohm
Input resistance:	350 ±3 Ohm
Output resistance:	350 ±0.5 Ohm
Recommended input:	5 Vdc/ac
Maximum supply voltage:	18 Vdc/ca
Material (accessories):	Yellow chromate steel or stainless steel
Ultimate uplift (% of capacity):	120 % RL
Safe uplift:	100 % RL

All indicated data may be changed without notice.
All the measures indicated are expressed in millimeters (mm).

BLH Nobel load cell **KIS-3**

available with certification • ATEX • OIML • NTEP • FM • IECEx

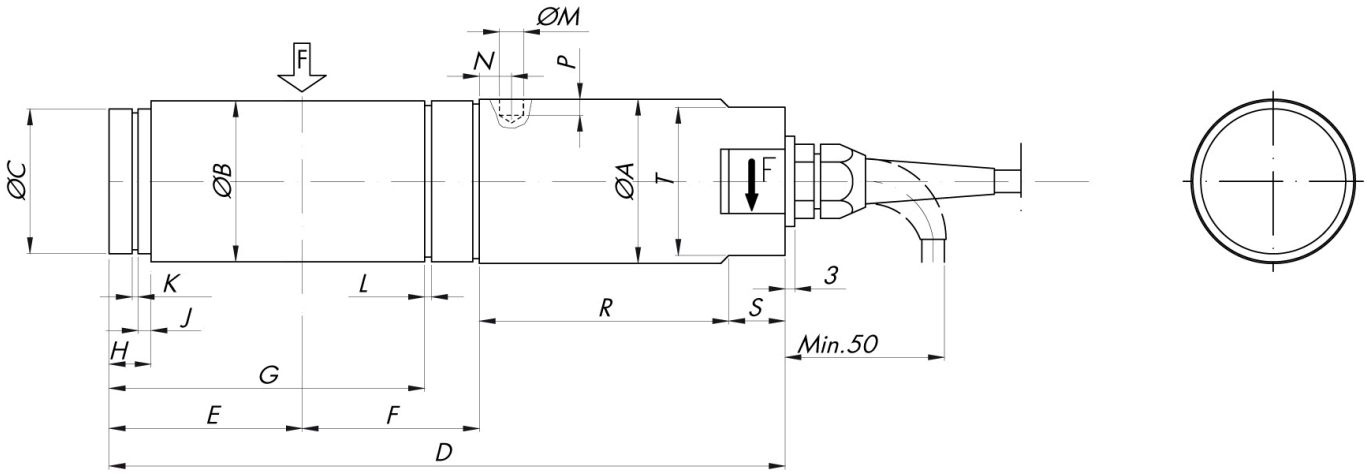

RANGE kN	ØA	ØB	ØC	D	E	F	G	H	J	K	L	ØM	N	P	R	S	T
1-2-5	34	33	29	169	46	35	-	10	2.5	1.6	-	4.4	10	2.3	70	15	30
10-20-30	51	50	45	213	60	55	97.85	13	4	1.85	2.15	7.5	12	5	75	20	46

All indicated data may be changed without notice.
All the measures indicated are expressed in millimeters (mm).

PAVONE SISTEMI S.R.L.
Via Tiberio Bianchi 11/13/15, 20863 Concorezzo (MB), Milan, Italy
T (+39) 039 9162656 **F** (+39) 039 9162675 **W** pavonesistemi.com
Industrial Electronic Weighing Systems since 1963

BLH Nobel load cell **KIS-3**

available with certification • ATEX • OIML • NTEP • FM • IECEx

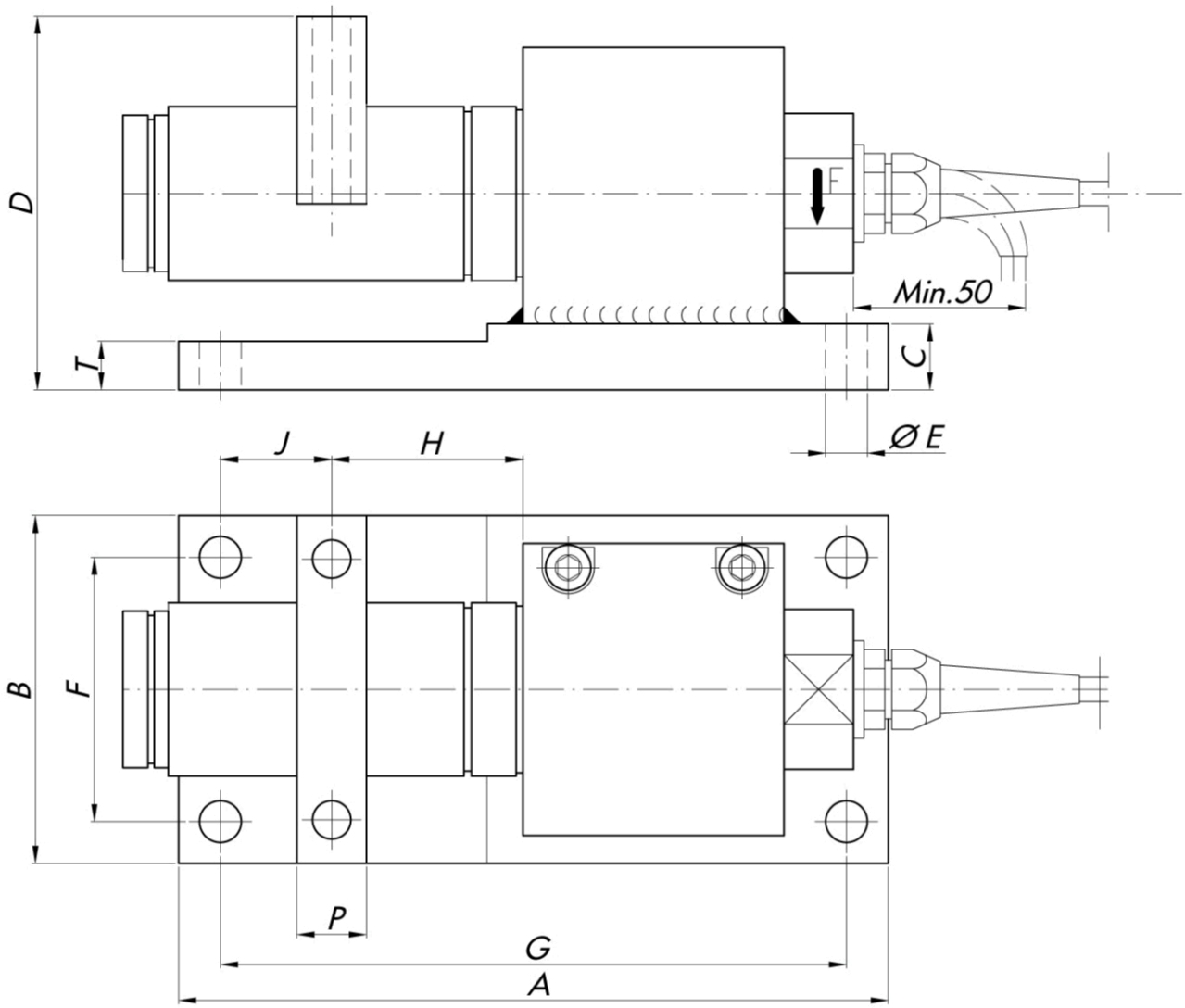

RANGE kN	A	B	C	D	E	F	G	H	J	K	L	M	N	P	R	S	T
1-2-5	175	75	14	81	12	51	151	35	31	55	70	41	8.5	20	M8	19	14
10-20-30	204	100	19	107.5	12	76	180	55	32	75	100	54	11	20	M10	27	14

All indicated data may be changed without notice.
All the measures indicated are expressed in millimeters (mm).

PAVONE SISTEMI S.R.L.
Via Tiberio Bianchi 11/13/15, 20863 Concorezzo (MB), Milan, Italy
T (+39) 039 9162656 **F** (+39) 039 9162675 **W** pavonesistemi.com
Industrial Electronic Weighing Systems since 1963

BLH Nobel load cell **KIS-3**

available with certification • ATEX • OIML • NTEP • FM • IECEx

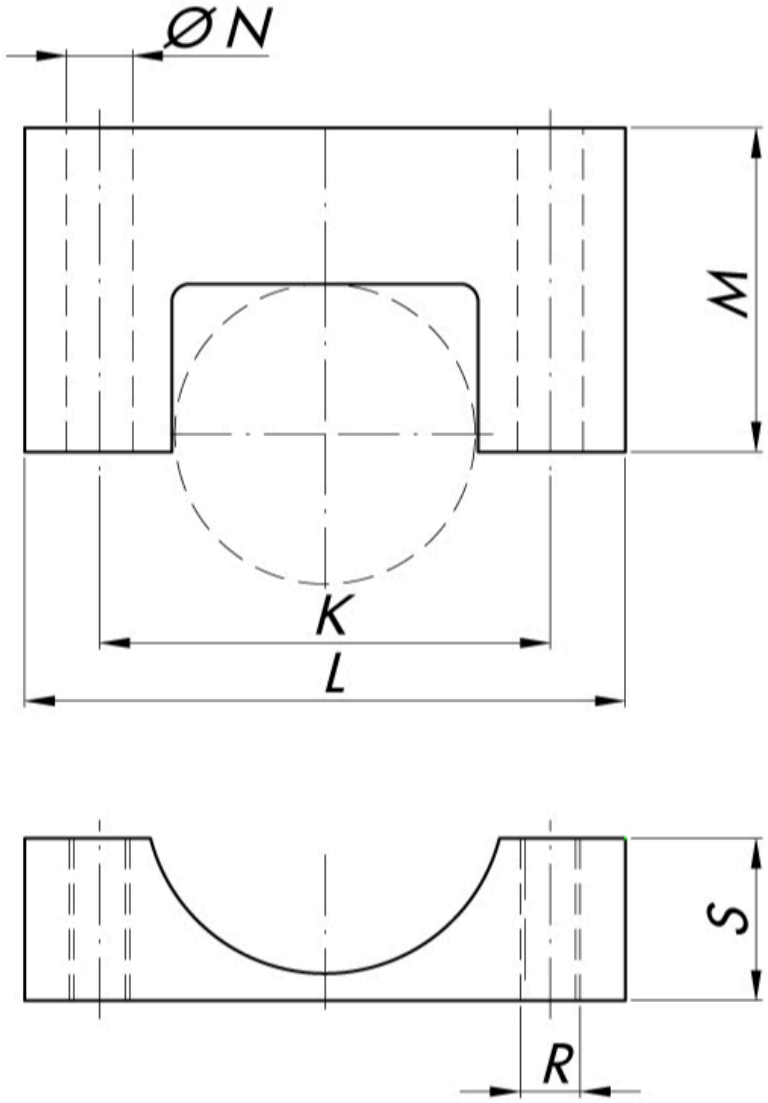

TEFLON LINED YOKE							
RANGE kN	K	L	M	N	R	S	T
1-2-5	55	75	50	8.5	M8	14.5	25
10-20-30	100	125	63	13	M12	24	33

All indicated data may be changed without notice.
All the measures indicated are expressed in millimeters (mm).

PAVONE SISTEMI S.R.L.
Via Tiberio Bianchi 11/13/15, 20863 Concorezzo (MB), Milan, Italy
T (+39) 039 9162656 **F** (+39) 039 9162675 **W** pavonesistemi.com
Industrial Electronic Weighing Systems since 1963