BLH Nobel load cell **KIS-1**

available with certification • ATEX • FM • IECEx

General information

PWS1920261124

The BLH NOBEL KIS 1 load cell is extremely precise and robust and it is resistant to very high lateral forces. The KIS 1 cell is easy to install and has a moveble loading point and a 10 meter 4-wire shielded cable. KIS 1 load cell has a wide range of application: large silos and scrap baskets, reactors and mixers, conveyor belts and high capacity force measurement systems. KIS 1 load cell is also available in ATEX version certified for use in explosive atmospheres.

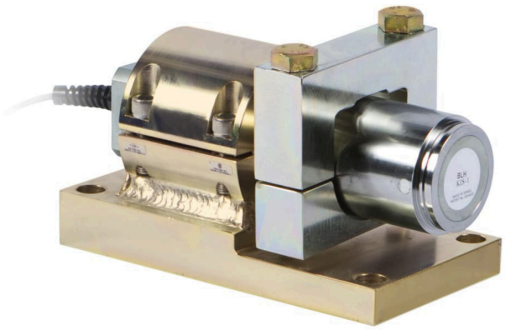

Suggested related products

A highly performing weighing system must be accurate, perfectly calibrated and well maintained. In order to improve the load cell performance and to optimize its functioning, you may need the following products:

Weight Transmitter UWT 6008

Weight Transmitter DAT 1400

Weight Indicator MCT 1302

Tester 1008 TESTER 1008

Junction Box CGS4-C

All indicated data may be changed without notice.
All the measures indicated are expressed in millimeters (mm).

PAVONE SISTEMI S.R.L.
Via Tiberio Bianchi 11/13/15, 20863 Concorezzo (MB), Milan, Italy
T (+39) 039 9162656 **F** (+39) 039 9162675 **W** pavonesistemi.com
Industrial Electronic Weighing Systems since 1963

Technical specifications

PWS1920261124

Rated load RL:	50, 100, 200, 300, 500 kN
Combined error:	±0.03 % RO
Repeatability:	±0.01 % RO
Creep (30 minutes):	±0.04 % RL
Safe overload:	200, 150 for 300kN and 500kN % RL
Ultimate overload:	300% (200% x 300 kN and 500 kN)
Safe sideload:	100% (50% x capacity=300kN)
Ultimate sideload:	200 % RL
Material:	50 kN Stainless steel; 100 - 500 kN stainless steel or yellow chromate steel
Degree of protection:	IP67
Temperature range:	-40 ÷ +80°C (+100°C)
Temperature effect on zero balance:	±0.003 % RO/°C
Temperature effect on output:	±0.0015 % of output/°C
Rated output RO:	2.040 mV/V ±0.1 %
Zero balance:	±1 % RO
Insulation resistance:	> 4 G Ohm
Input resistance:	350 ±3 Ohm
Output resistance:	350 ±0.5 Ohm
Recommended input:	10 Vdc/ac
Maximum supply voltage:	18 Vdc/ca
Safe uplift:	70 % RL
Material (accessories):	Yellow chromate steel
Ultimate uplift (% of capacity):	100% (50% x 300kN and 500kN)

All indicated data may be changed without notice.
All the measures indicated are expressed in millimeters (mm).

BLH Nobel load cell **KIS-1**

available with certification • ATEX • FM • IECEx

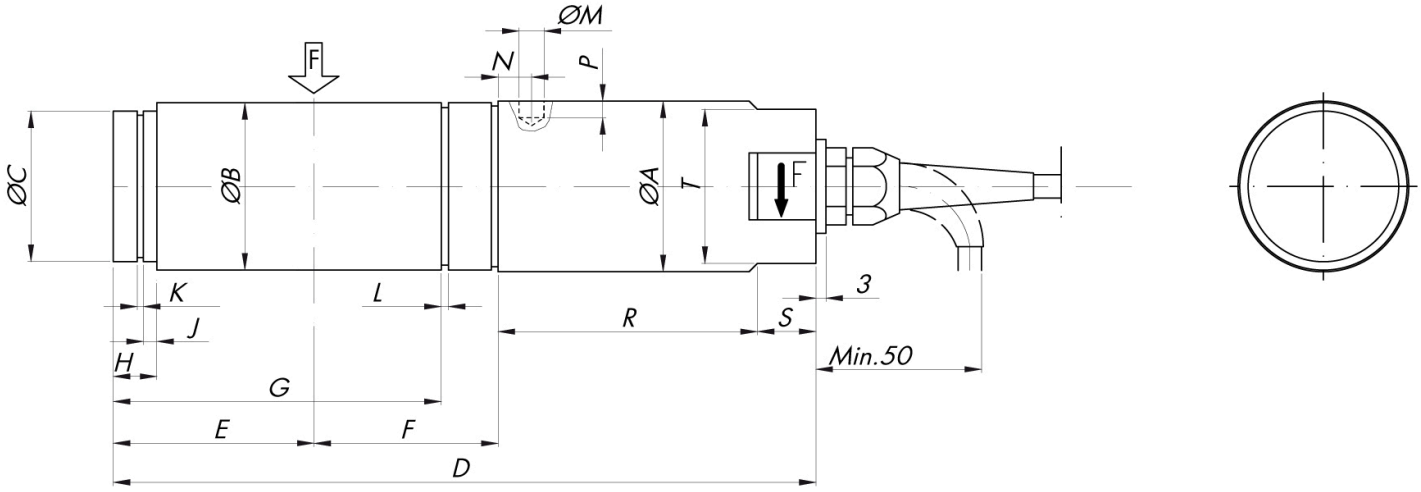

RANGE kN	ØA	ØB	ØC	D	E	F	G	H	J	K	L	ØM	N	P	R	S	T
50	77	75	70	291	93	65	141.3	12	5	2.65	2.65	9.1	14	7	110	20	60
100	92	90	82	315	107	65	155.4	15	6	2.65	3.15	12.6	17	8	120	20	70
200	101	100	90	346	128	65	175.8	15	6	3.15	3.15	15.7	19	8.5	130	20	80
300	101	100	90	346	128	65	175.8	15	6	3.15	3.15	15.7	19	8.5	130	20	80
500	142	140	130	450	165	75	212.8	35	20	4.15	4.15	15.7	30	8.5	180	27	80

All indicated data may be changed without notice.
All the measures indicated are expressed in millimeters (mm).

PAVONE SISTEMI S.R.L.
Via Tiberio Bianchi 11/13/15, 20863 Concorezzo (MB), Milan, Italy
T (+39) 039 9162656 **F** (+39) 039 9162675 **W** pavonesistemi.com
Industrial Electronic Weighing Systems since 1963

BLH Nobel load cell **KIS-1**

available with certification • ATEX • FM • IECEx

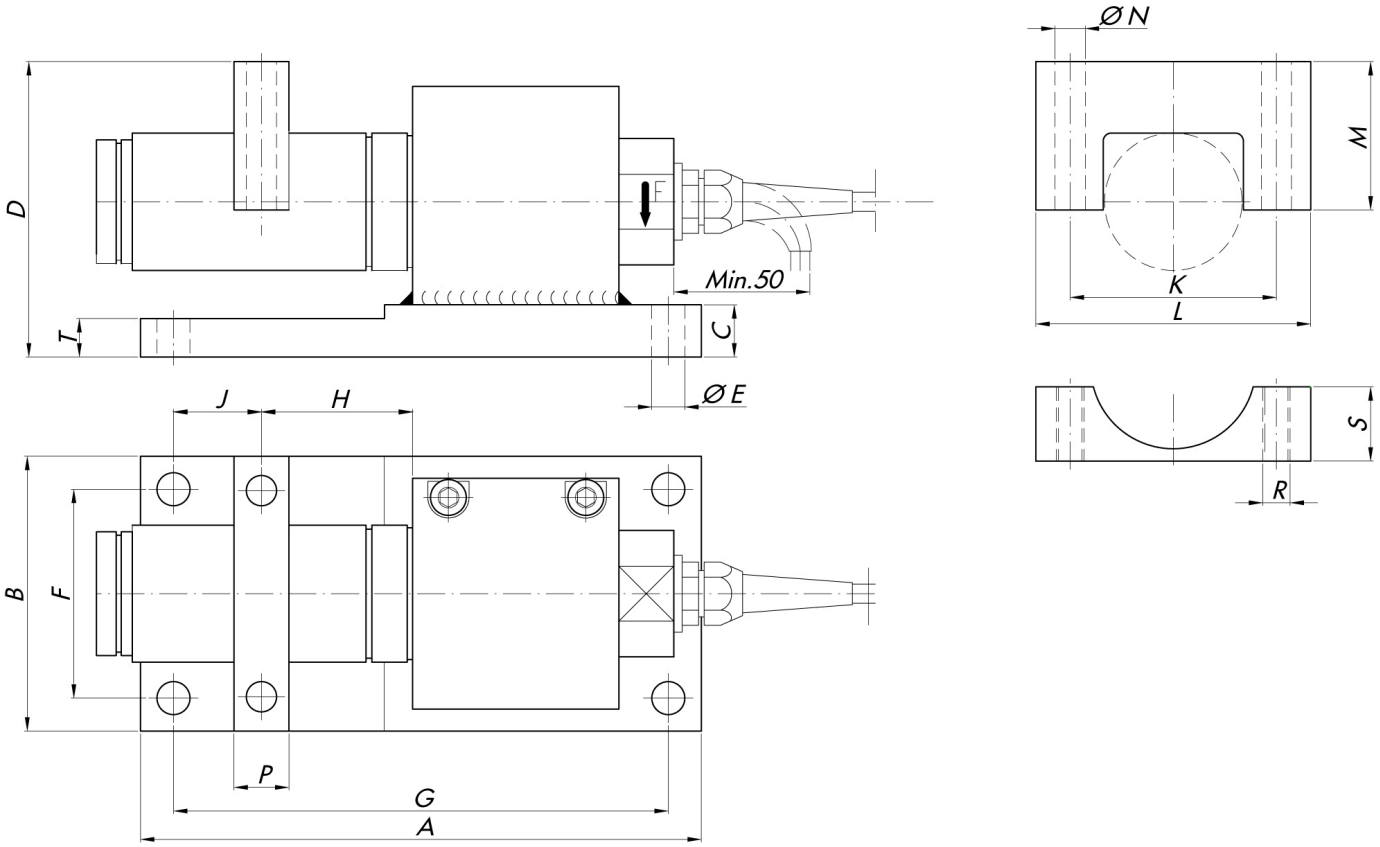

RANGE kN	A	B	C	D	ØE	F	G	H	J	K	L	M	ØN	P	R	S	T
50	280	150	30	152	16	115	245	65	45.5	115	150	72	18	30	M16	43	30
100	310	170	40	173	22	130	270	65	63	126	160	85	22	40	M20	50	26
200	340	180	50	199	25	140	300	65	71	146	190	95	25	50	M24	57	32
300	340	180	50	199	25	140	300	65	71				NOT AVAILABLE				
500	480	280	60	315	33	220	420	75	108				NOT AVAILABLE				

All indicated data may be changed without notice.
All the measures indicated are expressed in millimeters (mm).

PAVONE SISTEMI S.R.L.
Via Tiberio Bianchi 11/13/15, 20863 Concorezzo (MB), Milan, Italy
T (+39) 039 9162656 **F** (+39) 039 9162675 **W** pavonesistemi.com
Industrial Electronic Weighing Systems since 1963

BLH Nobel load cell **KIS-1**

available with certification • ATEX • FM • IECEx

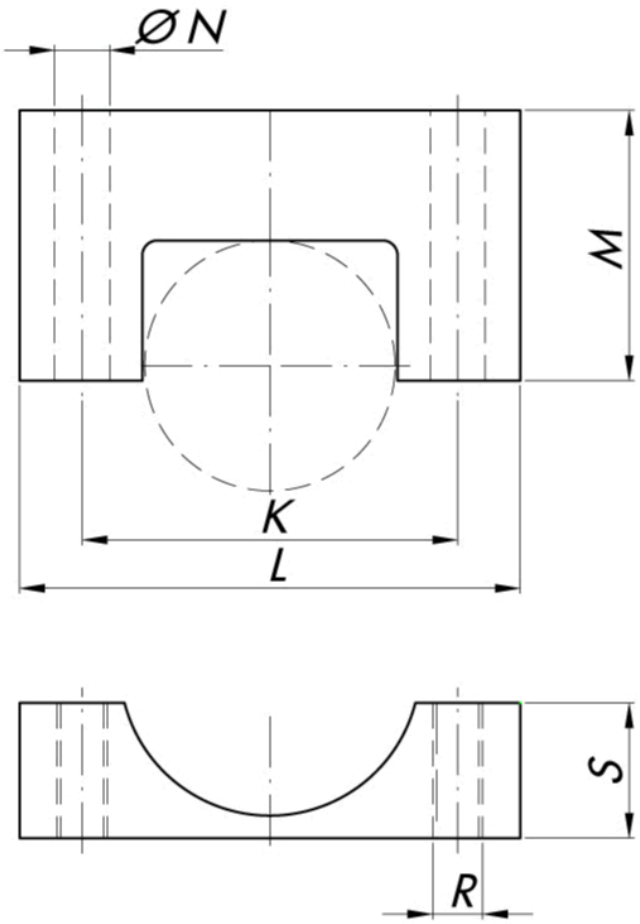

TEFLON LINED YOKE

RANGE kN	K	L	M	ØN	R	S	P
50	125	160	84.5	18	M16	33	30
100	150	190	92.5	22	M20	46	40
200	175	220	105	26	M24	56	53
300	175	220	105	26	M24	56	53
500	240	300	150	26	M24	91	60

All indicated data may be changed without notice.
All the measures indicated are expressed in millimeters (mm).

PAVONE SISTEMI S.R.L.
Via Tiberio Bianchi 11/13/15, 20863 Concorezzo (MB), Milan, Italy
T (+39) 039 9162656 **F** (+39) 039 9162675 **W** pavonesistemi.com
Industrial Electronic Weighing Systems since 1963