BLH Nobel load cell **KIM-1**

available with certification • ATEX • IECEx

General information

PWS2520261123

The BLH NOBEL KIM-1 load cell is extremely precise and robust, it is resistant to very high lateral forces, it has a moveable loading point and it is easy to install. The KIM-1 load cell is used in weighing / stocking systems (silos, bins, tanks), in mixing tanks, blending and dissoluble reactors, in force measurement systems and in conveyor belts. The KIM-1 load cell is also supplied with a shielded cable with 4 conductors and the length of 10 mt for electric connections.



Suggested related products

A highly performing weighing system must be accurate, perfectly calibrated and well maintained. In order to improve the load cell performance and to optimize its functioning, you may need the following products:

Weight Transmitter UWT 6008

Weight Transmitter DAT 1400

Weight Indicator MCT 1302

Tester 1008 TESTER 1008

Junction Box CGS4-C

All indicated data may be changed without notice.
All the measures indicated are expressed in millimeters (mm).

PAVONE SISTEMI S.R.L.
Via Tiberio Bianchi 11/13/15, 20863 Concorezzo (MB), Milan, Italy
T (+39) 039 9162656 **F** (+39) 039 9162675 **W** pavonesistemi.com
Industrial Electronic Weighing Systems since 1963

Technical specifications

PWS2520261123

Rated load RL:	200 kN
Combined error:	±0.1 % RL
Repeatability:	0.02 % RL
Creep (30 minutes):	±0.03 % RL
Safe overload:	50 % RL
Ultimate overload:	100 % RL
Ultimate sideload:	100 % RL
Degree of protection:	IP67
Deflection:	0.1 - 0.3 mm
Temperature range:	-40 ÷ +100 °C
Temperature effect on zero balance:	±0,003 % RO/°C
Temperature effect on output:	±0.003 % output/°C
Rated output RO:	2.040 mV/V ±0.25 %
Zero balance:	±2 % RO
Insulation resistance:	> 4 G Ohm
Input resistance:	350 ±5 Ohm
Output resistance:	350 ±0.5 Ohm
Recommended input:	5 Vdc/ac
Maximum supply voltage:	18 Vdc/ca
Tolerance of shunt calibration values:	±0.25 %

All indicated data may be changed without notice.
All the measures indicated are expressed in millimeters (mm).

BLH Nobel load cell **KIM-1**

available with certification • ATEX • IECEx

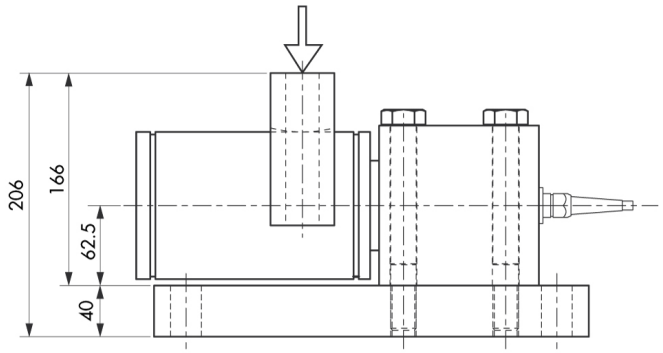

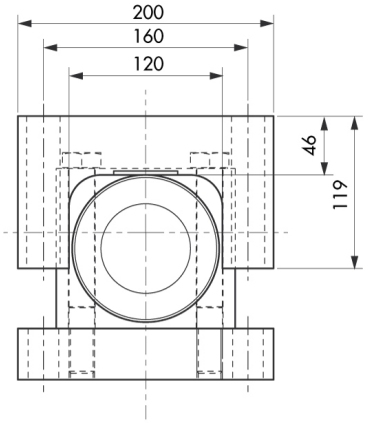

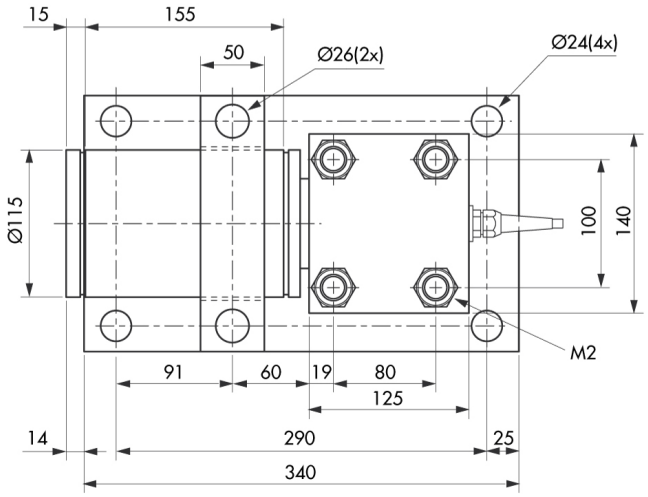

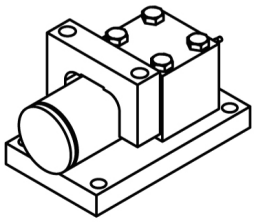

All indicated data may be changed without notice.
All the measures indicated are expressed in millimeters (mm).

PAVONE SISTEMI S.R.L.
Via Tiberio Bianchi 11/13/15, 20863 Concorezzo (MB), Milan, Italy
T (+39) 039 9162656 **F** (+39) 039 9162675 **W** pavonesistemi.com
Industrial Electronic Weighing Systems since 1963

BLH Nobel load cell **KIM-1**

available with certification • ATEX • IECEx

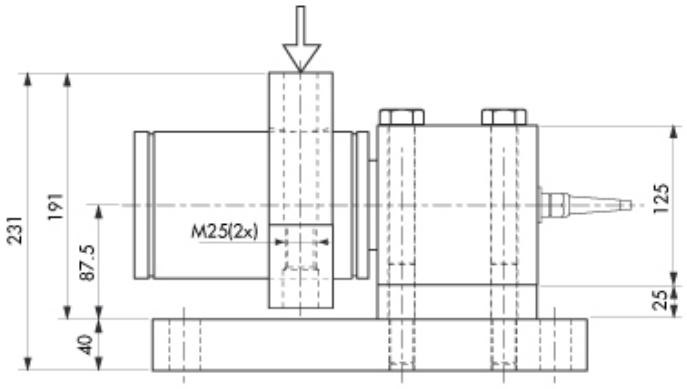

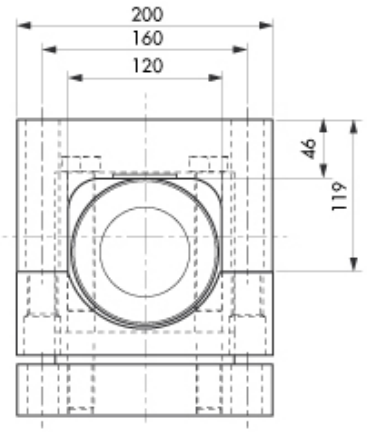

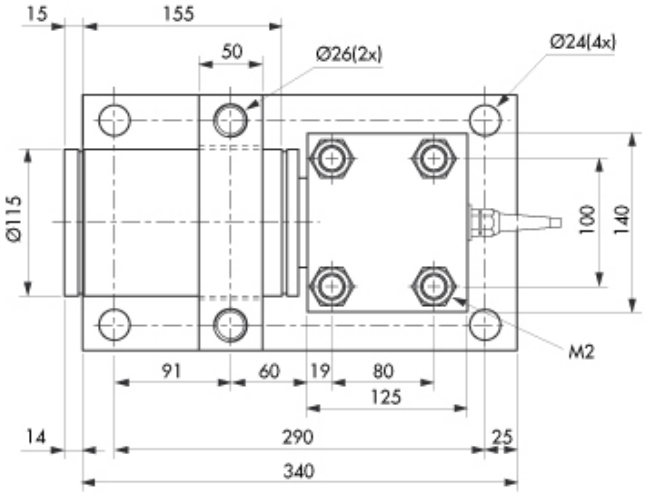

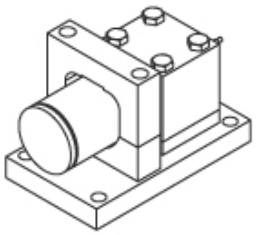

All indicated data may be changed without notice.
All the measures indicated are expressed in millimeters (mm).

PAVONE SISTEMI S.R.L.
Via Tiberio Bianchi 11/13/15, 20863 Concorezzo (MB), Milan, Italy
T (+39) 039 9162656 **F** (+39) 039 9162675 **W** pavonesistemi.com
Industrial Electronic Weighing Systems since 1963