General information

PWS8520261125

The DLW product is a loading platform with a motorized conveyor belt with adjustable height and direction. The DLW end-of-line weight controller is used where it is necessary to verify that the products are within a well-defined weight tolerance. End-of-line weight control is the ideal solution to integrate production and / or shipping lines with a weight control that guarantees the quality and quantity of the output product. The product allows you to adjust the belt speed and is equipped with a main switch, emergency button, start / restart button, optical / acoustic alarm, backlit LCD graphic display and 8 inputs and 16 outputs for exchanging commands on the line. With DLW it is possible to: program the alarm activation and tolerance indication times, print at each weigh with automatic storage, stop the tape, manage automatic or manual expulsion, correct the weight, create a report with start date and time and end of cycle with statistics of the executed weighs. The end-of-line weight control machine DLW has rear movement and adjustment and fixing feet wheels, pack presence and end weighing photocell (for dynamic weighing) as standard, with adjustable reading distance and keyboard functions that can be configured as required. The DLW product is versatile as it is suitable for static, dynamic, automatic and semi-automatic weighing. Among the different functions, there are dynamic or static autozero of the belt after a programmable number of weighs, pretara and delay of activation of the programmable ejector for each item and automatic calculation of weighing time and package positioning to optimize system operation.



All indicated data may be changed without notice.
All the measures indicated are expressed in millimeters (mm).

PAVONE SISTEMI S.R.L.
Via Tiberio Bianchi 11/13/15, 20863 Concorezzo (MB), Milan, Italy
T (+39) 039 9162656 **F** (+39) 039 9162675 **W** pavonesistemi.com
Industrial Electronic Weighing Systems since 1963

Technical specifications

PWS8520261125

Material:	structure and supporting frame in painted steel or in IP65 stainless steel
Logic output:	6 auxiliary relays -5A 220 Vac max
Serial port:	RS485, Ethernet
Power supply:	230 Vac 50 Hz
Data storage:	integrated permanent data memory, archive of 1000 items with programmable details for each item.
Tolerance control:	via item database with the setting of 3 tolerance thresholds (target tolerance control), via programmable weight thresholds with item database, via weight thresholds with rapid introduction
Item scanning:	via barcode
Conveyor belt speed:	10 ÷ 27 m/min adjustable
Conveyor belt dimensions:	500 x 800 mm or 650 x 1000 mm
Conveyor capacity:	6, 15, 30 Kg (27 packages per minute)

All indicated data may be changed without notice.
All the measures indicated are expressed in millimeters (mm).

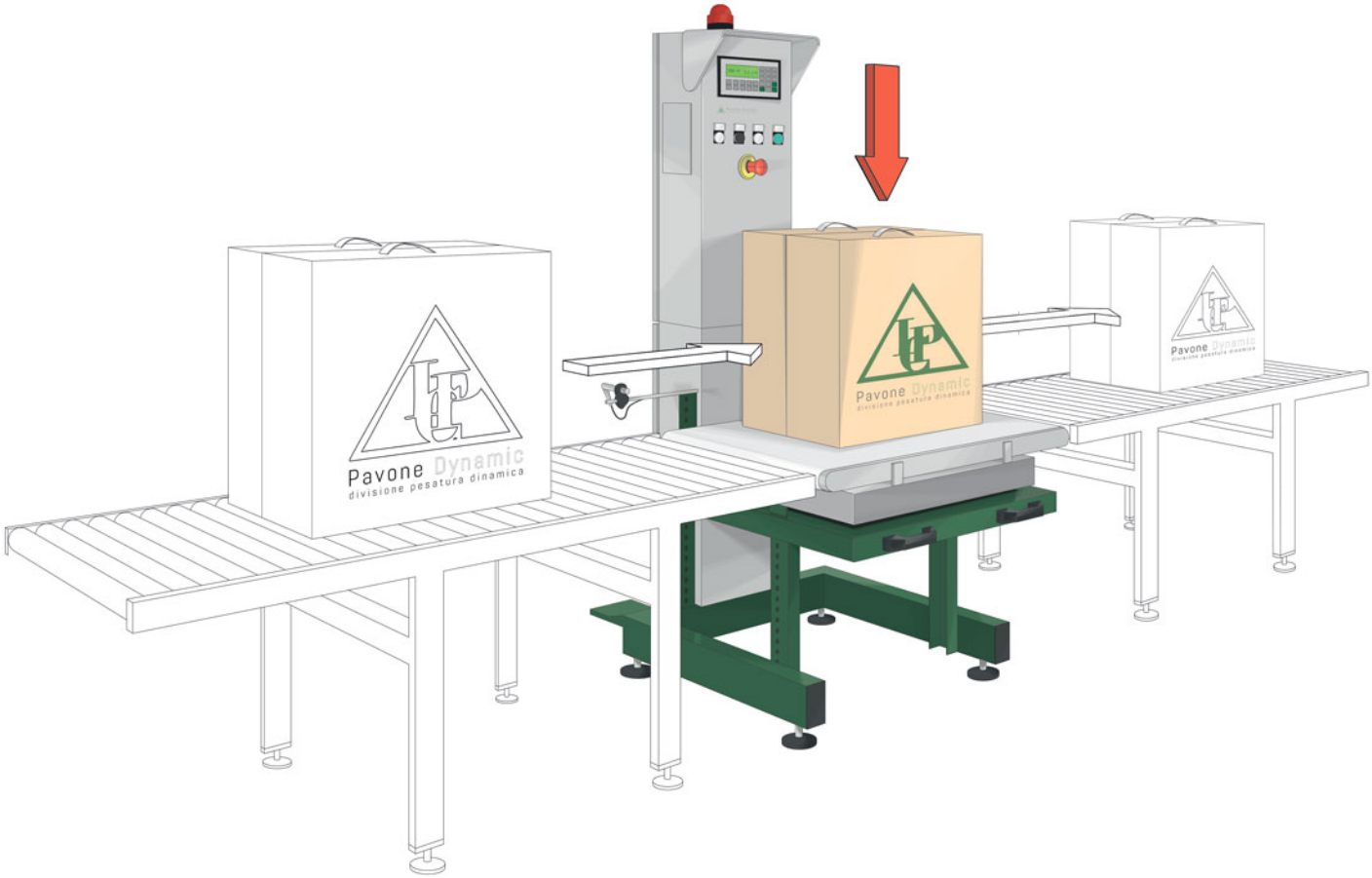

All indicated data may be changed without notice.
All the measures indicated are expressed in millimeters (mm).

PAVONE SISTEMI S.R.L.
Via Tiberio Bianchi 11/13/15, 20863 Concorezzo (MB), Milan, Italy
T (+39) 039 9162656 **F** (+39) 039 9162675 **W** pavonesistemi.com
Industrial Electronic Weighing Systems since 1963

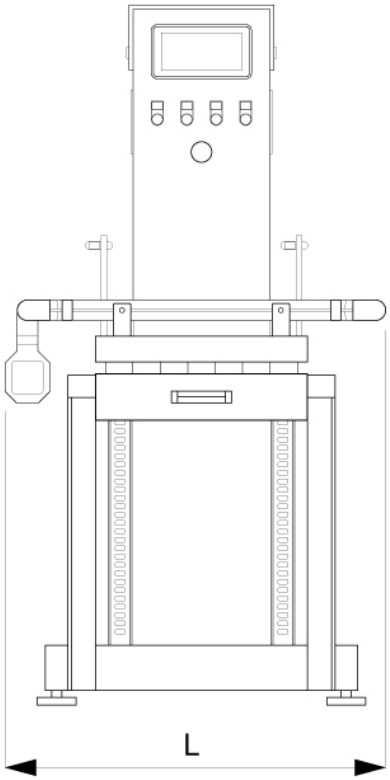

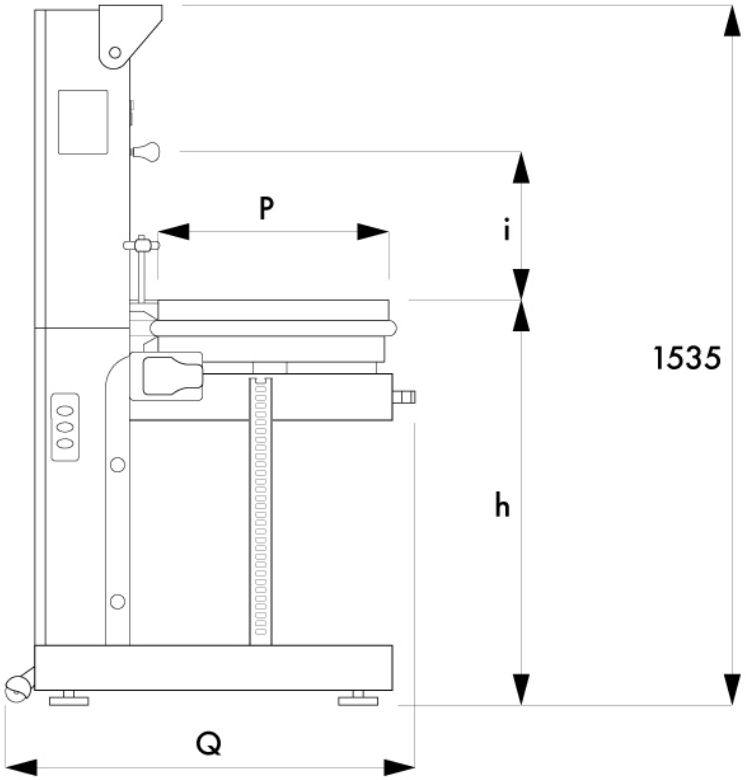

MODEL	Q	L	P	h
DLW 1	885	800	500	450-850
DLW 2	1030	1000	650	450-850

MODEL	CAPACITY kg	DIVISION g
DLW 1	6, 15 OR 30	2, 5 OR 10
DLW 2	15 OR 30	5 OR 10

All indicated data may be changed without notice.
All the measures indicated are expressed in millimeters (mm).

PAVONE SISTEMI S.R.L.
Via Tiberio Bianchi 11/13/15, 20863 Concorezzo (MB), Milan, Italy
T (+39) 039 9162656 **F** (+39) 039 9162675 **W** pavonesistemi.com
Industrial Electronic Weighing Systems since 1963